JLG®

An Oshkosh Corporation Company

Operation and Safety Manual

Original Instructions - Keep this manual with the machine at all times.

Boom Lift Models

1500SJ

ANSI CE **AS/NZS**

3121261

November 5, 2018 - Rev L

⚠ WARNING

Operating, servicing and maintaining this vehicle or equipment can expose you to chemicals including engine exhaust, carbon monoxide, phthalates, and lead, which are known to the State of California to cause cancer and birth defects or other reproductive harm. To minimize exposure, avoid breathing exhaust, do not idle the engine except as necessary, service your vehicle or equipment in a well-ventilated area and wear gloves or wash your hands frequently when servicing. For more information go to www.P65Warnings.ca.gov.

FOREWORD

This manual is a very important tool! Keep it with the machine at all times.

The purpose of this manual is to provide owners, users, operators, lessors, and lessees with the precautions and operating procedures essential for the safe and proper machine operation for its intended purpose.

Due to continuous product improvements, JLG Industries, Inc. reserves the right to make specification changes without prior notification. Contact JLG Industries, Inc. for updated information.

SAFETY ALERT SYMBOLS AND SAFETY SIGNAL WORDS

This is the Safety Alert Symbol. It is used to alert you to the potential personal injury hazards. Obey all safety messages that follow this symbol to avoid possible injury or death

⚠ DANGER

INDICATES AN IMMINENTLY HAZARDOUS SITUATION. IF NOT AVOIDED, WILL RESULT IN SERIOUS INJURY OR DEATH. THIS DECAL WILL HAVE A RED BACKGROUND.

⚠ WARNING

INDICATES A POTENTIALLY HAZARDOUS SITUATION. IF NOT AVOIDED, COULD RESULT IN SERIOUS INJURY OR DEATH. THIS DECAL WILL HAVE AN ORANGE BACKGROUND.

⚠ CAUTION

INDICATES A POTENTIALLY HAZARDOUS SITUATION. IF NOT AVOIDED, MAY RESULT IN MINOR OR MODERATE INJURY. IT MAY ALSO ALERT AGAINST UNSAFE PRACTICES. THIS DECAL WILL HAVE A YELLOW BACKGROUND.

NOTICE

INDICATES INFORMATION OR A COMPANY POLICY THAT RELATES DIRECTLY OR INDIRECTLY TO THE SAFETY OF PERSONNEL OR PROTECTION OF PROPERTY.

⚠ WARNING

THIS PRODUCT MUST COMPLY WITH ALL SAFETY RELATED BULLETINS. CONTACT JLG INDUSTRIES, INC. OR THE LOCAL AUTHORIZED JLG REPRESENTATIVE FOR INFORMATION REGARDING SAFETY-RELATED BULLETINS WHICH MAY HAVE BEEN ISSUED FOR THIS PRODUCT.

NOTICE

JLG INDUSTRIES, INC. SENDS SAFETY RELATED BULLETINS TO THE OWNER OF RECORD OF THIS MACHINE. CONTACT JLG INDUSTRIES, INC. TO ENSURE THAT THE CURRENT OWNER RECORDS ARE UPDATED AND ACCURATE.

NOTICE

JLG INDUSTRIES, INC. MUST BE NOTIFIED IMMEDIATELY IN ALL INSTANCES WHERE JLG PRODUCTS HAVE BEEN INVOLVED IN AN ACCIDENT INVOLVING BODILY INJURY OR DEATH OF PERSONNEL OR WHEN SUBSTANTIAL DAMAGE HAS OCCURRED TO PERSONAL PROPERTY OR THE JLG PRODUCT.

For:

- Accident Reporting
- Product Safety Publications
- Current Owner Updates
- Questions Regarding Product Safety
- Standards and Regulations Compliance Information
- Questions Regarding Special Product Applications
- Questions Regarding Product Modifications

Contact:

Product Safety and Reliability Department
JLG Industries, Inc.
13224 Fountainhead Plaza
Hagerstown, MD 21742
USA

or Your Local JLG Office
(See addresses on inside of manual cover)

In USA:

Toll Free: 877-JLG-SAFE (877-554-7233)

Outside USA:

Phone: 240-420-2661
Fax: 301-745-3713
E-mail: ProductSafety@JLG.com

REVISION LOG

Original Issue	A - April 25, 2011
Revised	B - May 23, 2011
Revised	C - November 10, 2011
Revised	D - September 10, 2012
Revised	E - September 4, 2014
Revised	F - January 5, 2015
Revised	G - May 23, 2017
Revised	H - June 30, 2017
Revised	I - March 23, 2018
Revised	J - May 30, 2018
Revised	K - June 29, 2018 - Revised Covers, Prop 65
Revised	L - November 5, 2018

SECTION - PARAGRAPH, SUBJECT **PAGE**

SECTION - 1 - SAFETY PRECAUTIONS

1.1 GENERAL 1-1
1.2 PRE-OPERATION 1-1
Operator Training and Knowledge 1-1
Workplace Inspection 1-2
Machine Inspection 1-3
1.3 OPERATION 1-3
General 1-3
Trip and Fall Hazards 1-4
Electrocution Hazards 1-5
Tipping Hazards 1-7
Crushing and Collision Hazards 1-10
1.4 TOWING, LIFTING, AND HAULING 1-11
1.5 MAINTENANCE 1-11
Maintenance Hazards 1-11
Battery Hazards 1-13

SECTION - 2 - USER RESPONSIBILITIES, MACHINE PREPARATION, AND INSPECTION

2.1 PERSONNEL TRAINING 2-1
Operator Training 2-1
Training Supervision 2-1
Operator Responsibility 2-1
2.2 PREPARATION, INSPECTION, AND MAINTENANCE 2-2
Pre-Start Inspection 2-7
Daily Walk-Around Inspection 2-8
Function Check 2-11
Boom Control System Check Procedure 2-12
SkyGuard Function Test 2-13
2.3 OSCILLATING AXLE LOCKOUT TEST (IF EQUIPPED) 2-14

SECTION - 3 - MACHINE CONTROLS AND INDICATORS

3.1 GENERAL 3-1
3.2 CONTROLS AND INDICATORS 3-1
Ground Control Station 3-2
Ground Control Indicator Panel 3-8
Platform Station 3-11
Platform Control Indicator Panel 3-19

SECTION - 4 - MACHINE OPERATION

4.1 DESCRIPTION 4-1
4.2 BOOM OPERATING CHARACTERISTICS AND LIMITATIONS 4-1
Capacities 4-1
Controlled Arc 4-2
Envelope Tracking 4-3
Controlled Angle 4-3
Swing Speed Proportioning 4-3
Stability 4-4
4.3 CAPACITY SELECT 4-4
4.4 ENGINE OPERATION 4-7
Starting Procedure 4-7

SECTION - PARAGRAPH, SUBJECT **PAGE**

Shutdown Procedure 4-8
Air Shutoff Valve (ASOV) (If Equipped) 4-9
Fuel Reserve / Shut-Off System 4-10
4.5 TRAVELING (DRIVING) 4-11
Traveling Forward and Reverse 4-13
Traveling on a Grade 4-14
4.6 STEERING 4-14
4.7 EXTENDING THE AXLES 4-14
4.8 PLATFORM 4-15
Platform Level Adjustment 4-15
Platform Rotation 4-15
4.9 BOOM 4-15
Swinging the Boom 4-16
Raising and Lowering the Boom 4-16
Telescoping the Boom 4-17
Telescoping the Jib 4-17
Stowing/Swinging the Jib 4-17
4.10 FUNCTION SPEED CONTROL 4-17
4.11 MACHINE SAFETY SYSTEM OVERRIDE (MSSO) (CE ONLY) 4-17
4.12 SKYGUARD OPERATION 4-18
SkyGuard 4-18
SkyGuard - SkyLine 4-18
SkyGuard - SkyEye 4-19
SkyGuard Function Table 4-19

SECTION - PARAGRAPH, SUBJECT **PAGE**

4.13 EMERGENCY TOWING 4-20
4.14 SHUT DOWN AND PARK 4-21
4.15 LIFTING AND TIE DOWN 4-21
Lifting 4-21
Tie Down 4-22
4.16 STOWING THE JIB FOR TRANSPORT 4-22

SECTION - 5 - LCD DISPLAY PANEL - GENERATION 1 & 2

5.1 IDENTIFICATION 5-1
5.2 LCD DISPLAY PANEL 5-2
Description 5-2
5.3 GENERATION 1 LCD DISPLAY PANEL SCREENS 5-3
Boot Up Splash Screen 5-3
Default Screen 5-5
Conditional Icons 5-7
CAN Communication Error Screen 5-9
Serviceable Fault Indication Screen 5-11
Keyswitch in Ground Control Mode Screen 5-13
Keyswitch in Ground Control Mode Screen with Operational Faults 5-15
Operational Fault - No Graphics Screen 5-17
Operational Fault - With Graphics Screen 5-19
Operational Fault - Footswitch Open Screen 5-21
Out of Transport - Axles Retracted 5-23
Operational Fault - Transport Swing Fault Screen . . 5-25
Envelope Speed Reduction Screen 5-27

SECTION - PARAGRAPH, SUBJECT **PAGE**

Operational Fault - Envelope Violation Fault Screen 5-29
Operational Fault - Over/Under Moment Fault (DTC 0017/0018)..... 5-31
5.4 GENERATION 2 LCD DISPLAY PANEL SCREENS..... 5-33
Boot up Splash Screen 5-33
Machine Operating Screen..... 5-35
KeySwitch In Ground Mode:..... 5-37
Function Speed..... 5-38
CAN Bus Lost 5-39
Take Foot Out 5-40
Put Foot In 5-41
BCS Lamp On..... 5-42
Broken Cable 5-44
Platform Level..... 5-45
Platform Overload 5-46
Capacity Mode Error 5-47
Swing DTCs 5-48
Jib Unlocked 5-50
Jib Locked..... 5-51
Chassis Status 5-52
Machine Tilted Mode 5-55
Envelope Status 5-56
Machine Model Unknown..... 5-60

SECTION - PARAGRAPH, SUBJECT **PAGE**

5.5 OPERATIONAL FAULT CODE LISTING..... 5-61

SECTION - 6 - EMERGENCY PROCEDURES

6.1 GENERAL 6-1
6.2 INCIDENT NOTIFICATION..... 6-1
6.3 EMERGENCY OPERATION..... 6-1
Operator Unable to Control Machine..... 6-1
Platform or Boom Caught Overhead or Boom Move ment Prevented by Boom Control System..... 6-2
6.4 EMERGENCY TOWING PROCEDURES..... 6-2
6.5 MACHINE SAFETY SYSTEM OVERRIDE (MSSO) (CE ONLY) 6-3

SECTION - 7 - ACCESSORIES

7.1 FALL ARREST PLATFORM..... 7-3
Safety Precautions..... 7-3
7.2 PIPE RACKS 7-3
Capacity Specifications (Australia Only)..... 7-4
Safety Precautions..... 7-4
Preparation and Inspection 7-4
Operation 7-4
7.3 SKYCUTTER™ 7-5
Safety Precautions..... 7-5
Accessory Ratings 7-6
Generator Output 7-6
Preparation and Inspection 7-6

SECTION - PARAGRAPH, SUBJECT **PAGE**

Operation 7-6
7.4 SKYGLAZIER™ 7-7
Capacity Specifications 7-7
Safety Precautions 7-8
Preparation and Inspection 7-8
Operation 7-8
7.5 SKYPOWER™ 7-9
Generator Output 7-9
Accessory Ratings 7-9
Safety Precautions 7-10
Preparation and Inspection 7-10
Operation 7-10
7.6 SKYWELDER™ 7-10
Accessory Ratings 7-11
Generator Output 7-11
Welding Accessories 7-11
Safety Precautions 7-12
Preparation and Inspection 7-12
Operation 7-12
7.7 SOFT TOUCH 7-13
7.8 BOLT-ON EXTERNAL FALL ARREST 7-13
Inspection Before Use 7-14

SECTION - PARAGRAPH, SUBJECT **PAGE**

SECTION - 8 - GENERAL SPECIFICATIONS & OPERATOR MAINTENANCE

8.1 INTRODUCTION 8-1
8.2 OPERATING SPECIFICATIONS AND PERFORMANCE DATA 8-1
Operating Specifications 8-1
Dimensional Data 8-2
Capacities 8-3
Tires 8-3
Engine Data 8-4
Major Component Weights 8-5
Hydraulic Oil 8-5
8.3 OPERATOR MAINTENANCE 8-13
8.4 TIRES & WHEELS 8-25
Tire Inflation 8-25
Tire Damage 8-25
Tire Replacement 8-25
Wheel Replacement 8-26
Wheel Installation 8-26
8.4 SUPPLEMENTAL INFORMATION 8-27

SECTION - 9 - INSPECTION AND REPAIR LOG

FIGURE NUMBER - TITLE **PAGE**

2-1. Basic Nomenclature - Sheet 1 of 3 2-4
2-2. Basic Nomenclature - Sheet 2 of 3 2-5
2-3. Basic Nomenclature - Sheet 3 of 3 2-6
0-1. Daily Walk-Around Inspection - Sheet 3 of 4 2-10
0-1. Daily Walk-Around Inspection - Sheet 4 of 4 2-10
3-1. Ground Control Station 3-3
3-2. Ground Control Station with Machine Safety System Override (MSSO) (CE Only) 3-4
3-3. Ground Control Indicator Panel 3-9
3-4. Platform Control Console 3-12
3-5. Platform Control Indicator Panel. 3-20
3-6. Fuel Level Indicator 3-22
4-1. Position of Least Forward Stability 4-5
4-2. Position of Least Backward Stability 4-6
4-3. ASOV Reset (Open to Closed Position) 4-9
4-4. Grade and Side Slopes 4-12
4-5. Traveling on a Grade 4-14
4-6. Drive Disconnect Hub 4-20
4-7. Lifting and Tie Down Chart 4-23
4-8. Decal Location Sheet 1 of 6. 4-24
4-9. Decal Location Sheet 2 of 6. 4-25
4-10. Decal Location Sheet 3 of 6. 4-26
4-11. Decal Location Sheet 4 of 6. 4-27
4-12. Decal Location Sheet 5 of 6. 4-28
4-13. Decal Location Sheet 6 of 6. 4-29
5-1. Generation 1 Boot Up Splash Screen. 5-1

FIGURE NUMBER - TITLE **PAGE**

5-2. Generation 2 Boot Up Splash Screen. 5-1
5-3. LCD Panel 5-2
5-4. Boot Up Splash Screen 5-4
5-5. Default Screen 5-6
5-6. Conditional Icons 5-8
5-7. CAN Communication Error Screen 5-10
5-8. Serviceable Fault Screen 5-12
5-9. Keyswitch in Ground Control Mode Screen 5-14
5-10. Keyswitch in Ground Control Mode with Operational Faults 5-16
5-11. Operational Fault - No Graphics Screen 5-18
5-12. Operational Fault - With Graphics Screen 5-20
5-13. Operational Fault - Footswitch Open Screen 5-22
5-14. Out of Transport - Axles Retracted Screen. 5-24
5-15. Transport Swing Fault Screen 5-26
5-16. Backward Envelope Speed Reduction Fault Screen . . . 5-28
5-17. Forward Envelope Violation Fault Screen 5-30
5-18. Over/Under Moment Fault Screen 5-32
5-19. Boot Up Splash Screen 5-33
5-20. Manual Screen. 5-34
5-21. Lanyard Screen 5-34
5-22. Select Capacity Zone Screen 5-34
5-23. Machine Operating Screen 5-35
5-24. Keyswitch In Ground Mode Screen 5-37
5-25. Function Speed Icons 5-38
5-26. CAN Bus Lost Screen 5-39

FIGURE NUMBER - TITLE **PAGE**

5-27. Take Foot Out Screen 5-40
5-28. Put Foot In Screen 5-41
5-29. BCS Lamp Screen 5-43
5-30. Broken Cable Screen 5-44
5-31. Level System DTC Screen 5-45
5-32. Overload DTC Screen 5-46
5-33. Capacity Mode Error Screen 5-47
5-34. Swing DTC Screen 5-49
5-35. Jib Unlocked Screen 5-50
5-36. Jib Locked Screen. 5-51
5-37. Axles Retracted Screen. 5-52
5-38. Axles Extended Screen. 5-53
5-39. Machine Tilted Mode Screen 5-55
5-40. Unrestricted Mode Screen 5-57
5-41. Restricted Mode Screen 5-58
5-42. Machine Model Unknown Screen 5-60
7-1. Bolt-On External Fall Arrest Cable Tension 7-15
7-2. Bolt On Fall Arrest System. 7-16
8-1. Oil Sampling Port 8-9
8-2. Engine Operating Temperature Specifications 8-10
8-3. Hydraulic Oil Operation Chart 8-11
8-4. Operator Maintenance and Lubrication Diagram 8-12

FIGURE NUMBER - TITLE **PAGE**

TABLE NUMBER - TITLE **PAGE**

1-1 Minimum Approach Distances (M.A.D.) 1-6
1-2 Beaufort Scale (For Reference Only)..... 1-9
2-1 Inspection and Maintenance Table 2-3
4-1 Decal Legend 4-30
5-1 Operational Fault Codes..... 5-61
7-1 Available Accessories 7-1
7-2 Options/Accessories Relationship Table..... 7-2
8-1 Operating Specifications 8-1
8-2 Dimensional Data 8-2
8-3 Capacities 8-3
8-4 Tire Specifications..... 8-3
8-5 Deutz TD2011L4 Specifications 8-4
8-6 Deutz TCD2.9L4 Specifications 8-4
8-7 Critical Stability Weights..... 8-5
8-8 Hydraulic Oil 8-5
8-9 Mobilfluid 424 Specs 8-6
8-10 Mobil DTE 10 Excel 32 Specs..... 8-6
8-11 UCon Hydrolube HP-5046 8-7
8-12 Mobil EAL H 46 Specs 8-7
8-13 Mobil EAL 46 Specs 8-8
8-14 Exxon Univis HVI 26 Specs..... 8-8
8-15 Lubrication Specifications..... 8-13
8-16 Wheel Torque Chart..... 8-27
9-1 Inspection and Repair Log..... 9-1

TABLE NUMBER - TITLE **PAGE**

TABLE NUMBER - TITLE **PAGE** **TABLE NUMBER - TITLE** **PAGE**

This Page Left Blank Intentionally

SECTION 1. SAFETY PRECAUTIONS

1.1 GENERAL

This section outlines the necessary precautions for proper and safe machine usage and maintenance. It is mandatory that a daily routine is established based on the content of this manual to promote proper machine usage. A maintenance program, using the information provided in this manual and the Service and Maintenance Manual, must also be established by a qualified person and must be followed to ensure that the machine is safe to operate.

The owner/user/operator/lessor/lessee of the machine must not accept operating responsibility until this manual has been read, training is accomplished, and operation of the machine has been completed under the supervision of an experienced and qualified operator.

This section contains the responsibilities of the owner, user, operator, lessor, and lessee concerning safety, training, inspection, maintenance, application, and operation. If there are any questions with regard to safety, training, inspection, maintenance, application, and operation, please contact JLG Industries, Inc. ("JLG").

⚠ WARNING

FAILURE TO COMPLY WITH THE SAFETY PRECAUTIONS LISTED IN THIS MANUAL COULD RESULT IN MACHINE DAMAGE, PROPERTY DAMAGE, PERSONAL INJURY OR DEATH.

1.2 PRE-OPERATION

Operator Training and Knowledge

- The Operation and Safety Manual must be read and understood in its entirety before operating the machine. For clarification, questions, or additional information regarding any portions of this manual, contact JLG Industries, Inc.

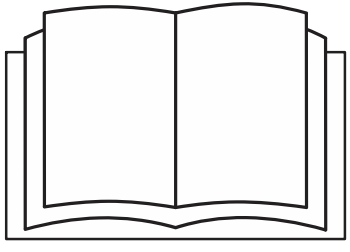

- An operator must not accept operating responsibilities until adequate training has been given by competent and authorized persons.
- Allow only those authorized and qualified personnel to operate the machine who have demonstrated that they understand the safe and proper operation and maintenance of the unit.
- Read, understand, and obey all DANGERS, WARNINGS, CAUTIONS, and operating instructions on the machine and in this manual.
- Ensure that the machine is to be used in a manner which is within the scope of its intended application as determined by JLG.
- All operating personnel must be familiar with the emergency controls and emergency operation of the machine as specified in this manual.
- Read, understand, and obey all applicable employer, local, and governmental regulations as they pertain to your utilization and application of the machine.

Workplace Inspection

- Precautions to avoid all hazards in the work area must be taken by the user before and during operation of the machine.
- Do not operate or raise the platform from a position on trucks, trailers, railway cars, floating vessels, scaffolds or other equipment unless the application is approved in writing by JLG.
- Before operation, check work area for overhead hazards such as electric lines, bridge cranes, and other potential overhead obstructions.
- Check operating surfaces for holes, bumps, drop-offs, obstructions, debris, concealed holes, and other potential hazards.
- Check the work area for hazardous locations. Do not operate the machine in hazardous environments unless approved for that purpose by JLG.
- Ensure that the ground conditions are adequate to support the maximum tire load indicated on the tire load decals located on the chassis adjacent to each wheel. Do not travel on unsupported surfaces.

Machine Inspection

- Do not operate this machine until the inspections and functional checks as specified in Section 2 of this manual have been performed.
- Do not operate this machine until it has been serviced and maintained according to the maintenance and inspection requirements as specified in the machine's Service and Maintenance Manual.
- Ensure all safety devices are operating properly. Modification of these devices is a safety violation.

⚠ WARNING

MODIFICATION OR ALTERATION OF AN AERIAL WORK PLATFORM SHALL BE MADE ONLY WITH PRIOR WRITTEN PERMISSION FROM THE MANUFACTURER.

- Do not operate any machine on which the safety or instruction placards or decals are missing or illegible.
- Check the machine for modifications to original components. Ensure that any modifications have been approved by JLG.
- Avoid accumulation of debris on platform floor. Keep mud, oil, grease, and other slippery substances from footwear and platform floor.

1.3 OPERATION

General

- Machine operation requires your full attention. Bring the machine to a full stop before using any device, i.e. cell phones, two-way radios, etc. that will distract your attention from safely operating the machine.
- Do not use the machine for any purpose other than positioning personnel, their tools, and equipment.
- Before operation, the user must be familiar with the machine capabilities and operating characteristics of all functions.
- Never operate a malfunctioning machine. If a malfunction occurs, shut down the machine. Remove the unit from service and notify the proper authorities.
- Do not remove, modify, or disable any safety devices.
- Never slam a control switch or lever through neutral to an opposite direction. Always return switch to neutral and stop before moving the switch to the next function. Operate controls with slow and even pressure.
- Do not allow personnel to tamper with or operate the machine from the ground with personnel in the platform, except in an emergency.

- Do not carry materials directly on platform railing unless approved by JLG.
- When two or more persons are in the platform, the operator shall be responsible for all machine operations.
- Always ensure that power tools are properly stowed and never left hanging by their cord from the platform work area.
- When driving, always position boom over rear axle in line with the direction of travel. Remember, if boom is over the front axle, steer and drive functions will be reversed.
- Do not assist a stuck or disabled machine by pushing or pulling except by pulling at the chassis tie-down lugs.
- Fully lower platform and shut off all power before leaving machine.
- Remove all rings, watches, and jewelry when operating machine. Do not wear loose fitting clothing or long hair unrestrained which may become caught or entangled in equipment.
- Persons under the influence of drugs or alcohol or who are subject to seizures, dizziness or loss of physical control must not operate this machine.
- Hydraulic cylinders are subject to thermal expansion and contraction. This may result in changes to the boom and/or platform position while the machine is stationary. Factors affecting thermal movement can include the length of time the machine will remain stationary, hydraulic oil temperature, ambient air temperature, and boom and platform position.

Trip and Fall Hazards

- During operation, occupants in the platform must wear a full body harness with a lanyard attached to an authorized lanyard anchorage point. Attach only one (1) lanyard per lanyard anchorage point..

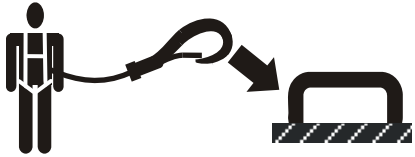

- Enter and exit only through gate area. Use extreme caution when entering or leaving platform. Ensure that the platform assembly is fully lowered. Face the machine when entering or leaving the platform. Always maintain “three point contact” with the machine, using two hands and one foot or two feet and one hand at all times during entry and exit.

- Before operating the machine, make sure all gates are closed and fastened in their proper position.

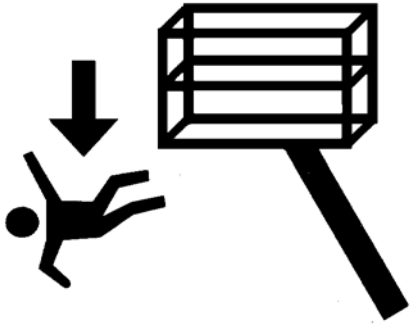

- Keep both feet firmly positioned on the platform floor at all times. Never position ladders, boxes, steps, planks, or similar items on unit to provide additional reach for any purpose.
- Keep oil, mud, and slippery substances cleaned from footwear and the platform floor.

Electrocution Hazards

- This machine is not insulated and does not provide protection from contact or proximity to electrical current.

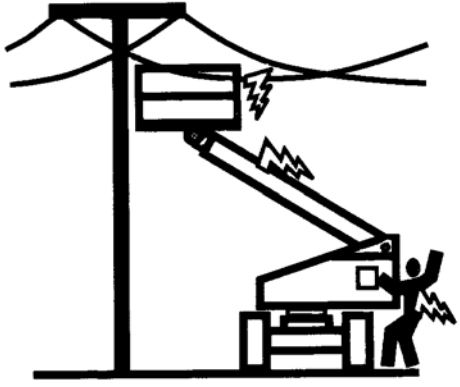

- Maintain distance from electrical lines, apparatus, or any energized (exposed or insulated) parts according to the Minimum Approach Distance (MAD) as shown in Table 1-1.
- Allow for machine movement and electrical line swaying.

Table 1-1. Minimum Approach Distances (M.A.D.)

Voltage Range (Phase to Phase)	MINIMUM APPROACH DISTANCE in Feet (Meters)
0 to 50 KV	10 (3)
Over 50KV to 200 KV	15 (5)
Over 200 KV to 350 KV	20 (6)
Over 350 KV to 500 KV	25 (8)
Over 500 KV to 750 KV	35 (11)
Over 750 KV to 1000 KV	45 (14)

NOTE: ***This requirement shall apply except where employer, local or governmental regulations are more stringent.***

- Maintain a clearance of at least 10 ft. (3m) between any part of the machine and its occupants, their tools, and their equipment from any electrical line or apparatus carrying up to 50,000 volts. One foot additional clearance is required for every additional 30,000 volts or less.

- The minimum approach distance may be reduced if insulating barriers are installed to prevent contact, and the barriers are rated for the voltage of the line being guarded. These barriers shall not be part of (or attached to) the machine. The minimum approach distance shall be reduced to a distance within the designed working dimensions of the insulating barrier. This determination shall be made by a qualified person in accordance with the employer, local, or governmental requirements for work practices near energized equipment.

⚠ DANGER

DO NOT MANEUVER MACHINE OR PERSONNEL INSIDE PROHIBITED ZONE (MAD). ASSUME ALL ELECTRICAL PARTS AND WIRING ARE ENERGIZED UNLESS KNOWN OTHERWISE.

Tipping Hazards

- The user must be familiar with the surface before driving. Do not exceed the allowable sideslope and grade while driving.

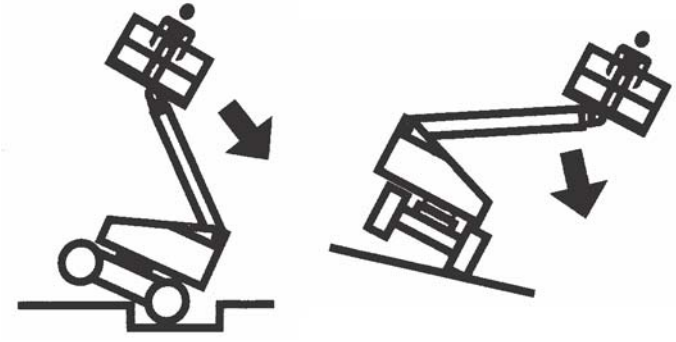

- Do not elevate platform or drive with platform elevated while on or near a sloping, uneven, or soft surface. Ensure machine is positioned on a firm, level and smooth surface before elevating platform or driving with the platform in the elevated position.
- Before driving on floors, bridges, trucks, and other surfaces, check allowable capacity of the surfaces.

- Never exceed the maximum work load as specified on the platform. Keep all loads within the confines of the platform, unless authorized by JLG.
- Keep the chassis of the machine a minimum of 2 ft. (0.6m) from holes, bumps, drop-offs, obstructions, debris, concealed holes, and other potential hazards at the ground level.
- Do not push or pull any object with the boom.
- Never attempt to use the machine as a crane. Do not tie-off machine to any adjacent structure. Never attach wire, cable, or any similar items to platform.
- If boom assembly or platform is in a position that one or more wheels are off the ground, all persons must be removed before attempting to stabilize the machine. Use cranes, forklift trucks, or other appropriate equipment to stabilize machine.
- Do not operate the machine when wind conditions, including gusts, may exceed 28 mph (12.5 m/s). Factors affecting wind speed are; platform elevation, surrounding structures, local weather events, and approaching storms. Refer to Table 1-2, Beaufort scale (For Reference Only) or use other means to monitor wind conditions.
- Wind speed can be significantly greater at height than at ground level.
- Wind speed can change rapidly. Always consider approaching weather events, the time required to lower the platform, and methods to monitor current and potential wind conditions.
- Do not increase surface area of the platform or the load. Increased areas exposed to wind will decrease stability.
- Do not increase the platform size with unauthorized modifications or attachments.

NOTICE

DO NOT OPERATE THE MACHINE WHEN WIND CONDITIONS EXCEED 28 MPH (12.5 M/S).

Table 1-2. Beaufort Scale (For Reference Only)

Beaufort Number	Wind Speed		Description	Land Conditions
	mph	m/s		
0	0	0-0.2	Calm	Calm. Smoke rises vertically
1	1-3	0.3-1.5	Light air	Wind motion visible in smoke
2	4-7	1.6-3.3	Light breeze	Wind felt on exposed skin. Leaves rustle
3	8-12	3.4-5.4	Gentle breeze	Leaves and smaller twigs in constant motion
4	13-18	5.5-7.9	Moderate breeze	Dust and loose paper raised. Small branches begin to move.
5	19-24	8.0-10.7	Fresh breeze	Smaller trees sway.
6	25-31	10.8-13.8	Strong breeze	Large branches in motion. Flags waving near horizontal. Umbrella use becomes difficult.
7	32-38	13.9-17.1	Near Gale/Moderate Gale	Whole trees in motion. Effort needed to walk against the wind.
8	39-46	17.2-20.7	Fresh Gale	Twigs broken from trees. Cars veer on road.
9	47-54	20.8-24.4	Strong Gale	Light structure damage.

Crushing and Collision Hazards

- Approved head gear must be worn by all operating and ground personnel.
- Check work area for clearances overhead, on sides, and bottom of platform when lifting or lowering platform, and driving.

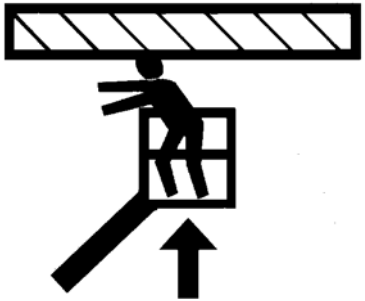

- During operation, keep all body parts inside platform railing.
- Use the boom functions, not the drive function, to position the platform close to obstacles.
- Always post a lookout when driving in areas where vision is obstructed.
- Keep non-operating personnel at least 6 ft. (1.8m) away from machine during all driving and swing operations.
- Under all travel conditions, the operator must limit travel speed according to conditions of ground surface, congestion, visibility, slope, location of personnel, and other factors which may cause collision or injury to personnel.
- Be aware of stopping distances in all drive speeds. When driving in high speed, switch to low speed before stopping. Travel grades in low speed only.
- Do not use high speed drive in restricted or close quarters or when driving in reverse.
- Exercise extreme caution at all times to prevent obstacles from striking or interfering with operating controls and persons in the platform.
- Be sure that operators of other overhead and floor level machines are aware of the aerial work platform's presence. Disconnect power to overhead cranes.
- Warn personnel not to work, stand, or walk under a raised boom or platform. Position barricades on floor if necessary.

1.4 TOWING, LIFTING, AND HAULING

- Never allow personnel in platform while towing, lifting, or hauling.
- This machine should not be towed, except in the event of emergency, malfunction, power failure, or loading/unloading. Refer to the Emergency Procedures section of this manual for emergency towing procedures.
- Ensure boom is in the stowed position and, if equipped, the turntable locked prior to towing, lifting or hauling. The platform must be completely empty of tools.
- When lifting machine, lift only at designated areas of the machine. Lift the unit with equipment of adequate capacity.
- Refer to the Machine Operation section of this manual for lifting information.

1.5 MAINTENANCE

This sub-section contains general safety precautions which must be observed during maintenance of this machine. Additional precautions to be observed during machine maintenance are inserted at the appropriate points in this manual and in the Service and Maintenance Manual. It is of utmost importance that maintenance personnel pay strict attention to these precautions to avoid possible injury to personnel or damage to the machine or property. A maintenance program must be established by a qualified person and must be followed to ensure that the machine is safe.

Maintenance Hazards

- Shut off power to all controls and ensure that all moving parts are secured from inadvertent motion prior to performing any adjustments or repairs.
- Never work under an elevated platform until it has been fully lowered to the full down position, if possible, or otherwise supported and restrained from movement with appropriate safety props, blocking, or overhead supports.
- DO NOT attempt to repair or tighten any hydraulic hoses or fittings while the machine is powered on or when the hydraulic system is under pressure.
- Always relieve hydraulic pressure from all hydraulic circuits before loosening or removing hydraulic components.

- DO NOT use your hand to check for leaks. Use a piece of cardboard or paper to search for leaks. Wear gloves to help protect hands from spraying fluid.

- Ensure replacement parts or components are identical or equivalent to original parts or components.
- Never attempt to move heavy parts without the aid of a mechanical device. Do not allow heavy objects to rest in an unstable position. Ensure adequate support is provided when raising components of the machine.
- Do not use machine as a ground for welding.
- When performing welding or metal cutting operations, precautions must be taken to protect the chassis from direct exposure to weld and metal cutting spatter.
- Do not refuel the machine with the engine running.
- Use only approved non-flammable cleaning solvents.
- Do not replace items critical to stability, such as batteries or solid tires, with items of different weight or specification. Do not modify unit in any way to affect stability.
- Refer to the Service and Maintenance Manual for the weights of critical stability items.

⚠ WARNING

MODIFICATION OR ALTERATION OF AN AERIAL WORK PLATFORM SHALL BE MADE ONLY WITH PRIOR WRITTEN PERMISSION FROM THE MANUFACTURER.

Battery Hazards

- Always disconnect batteries when servicing electrical components or when performing welding on the machine.
- Do not allow smoking, open flame, or sparks near battery during charging or servicing.
- Do not contact tools or other metal objects across the battery terminals.
- Always wear hand, eye, and face protection when servicing batteries. Ensure that battery acid does not come in contact with skin or clothing.

⚠ CAUTION

BATTERY FLUID IS HIGHLY CORROSIVE. AVOID CONTACT WITH SKIN AND CLOTHING AT ALL TIMES. IMMEDIATELY RINSE ANY CONTACTED AREA WITH CLEAN WATER AND SEEK MEDICAL ATTENTION.

- Charge batteries only in a well ventilated area.
- Avoid overfilling the battery fluid level. Add distilled water to batteries only after the batteries are fully charged.

NOTES:

SECTION 2. USER RESPONSIBILITIES, MACHINE PREPARATION, AND INSPECTION

2.1 PERSONNEL TRAINING

The aerial platform is a personnel handling device; so it is necessary that it be operated and maintained only by trained personnel.

Persons under the influence of drugs or alcohol or who are subject to seizures, dizziness or loss of physical control must not operate this machine.

Operator Training

Operator training must cover:

1. Use and limitations of the controls in the platform and at the ground, emergency controls and safety systems.
2. Control labels, instructions, and warnings on the machine.
3. Rules of the employer and government regulations.
4. Use of approved fall protection device.
5. Enough knowledge of the mechanical operation of the machine to recognize a malfunction or potential malfunction.
6. The safest means to operate the machine where overhead obstructions, other moving equipment, and obstacles, depressions, holes, or drop-offs exist.
7. Means to avoid the hazards of unprotected electrical conductors.
8. Specific job requirements or machine application.

Training Supervision

Training must be done under the supervision of a qualified person in an open area free of obstructions until the trainee has developed the ability to safely control and operate the machine.

Operator Responsibility

The operator must be instructed that he/she has the responsibility and authority to shut down the machine in case of a malfunction or other unsafe condition of either the machine or the job site.

2.2 PREPARATION, INSPECTION, AND MAINTENANCE

The following table covers the periodic machine inspections and maintenance required by JLG Industries, Inc. Consult local regulations for further requirements for aerial work platforms. The frequency of inspections and maintenance must be increased as necessary when the machine is used in a harsh or hostile environment, if the machine is used with increased frequency, or if the machine is used in a severe manner.

NOTICE

JLG INDUSTRIES, INC. RECOGNIZES A FACTORY TRAINED SERVICE TECHNICIAN AS A PERSON WHO HAS SUCCESSFULLY COMPLETED THE JLG SERVICE TRAINING SCHOOL FOR THE SPECIFIC JLG PRODUCT MODEL.

Table 2-1. Inspection and Maintenance Table

Type	Frequency	Primary Responsibility	Service Qualification	Reference
Pre-Start Inspection	Before using each day; or whenever there's an Operator change.	User or Operator	User or Operator	Operation and Safety Manual
Pre-Delivery Inspection (See Note)	Before each sale, lease, or rental delivery.	Owner, Dealer, or User	Qualified JLG Mechanic	Service and Maintenance Manual and applicable JLG inspection form
Frequent Inspection (See Note)	In service for 3 months or 150 hours, whichever comes first; or Out of service for a period of more than 3 months; or Purchased used.	Owner, Dealer, or User	Qualified JLG Mechanic	Service and Maintenance Manual and applicable JLG inspection form
Annual Machine Inspection (See Note)	Annually, no later than 13 months from the date of prior inspection.	Owner, Dealer, or User	Factory Trained Service Technician (Recommended)	Service and Maintenance Manual and applicable JLG inspection form
Preventative Maintenance	At intervals as specified in the Service and Maintenance Manual.	Owner, Dealer, or User	Qualified JLG Mechanic	Service and Maintenance Manual
NOTE: *Inspection forms are available from JLG. Use the Service and Maintenance Manual to perform inspections.*				

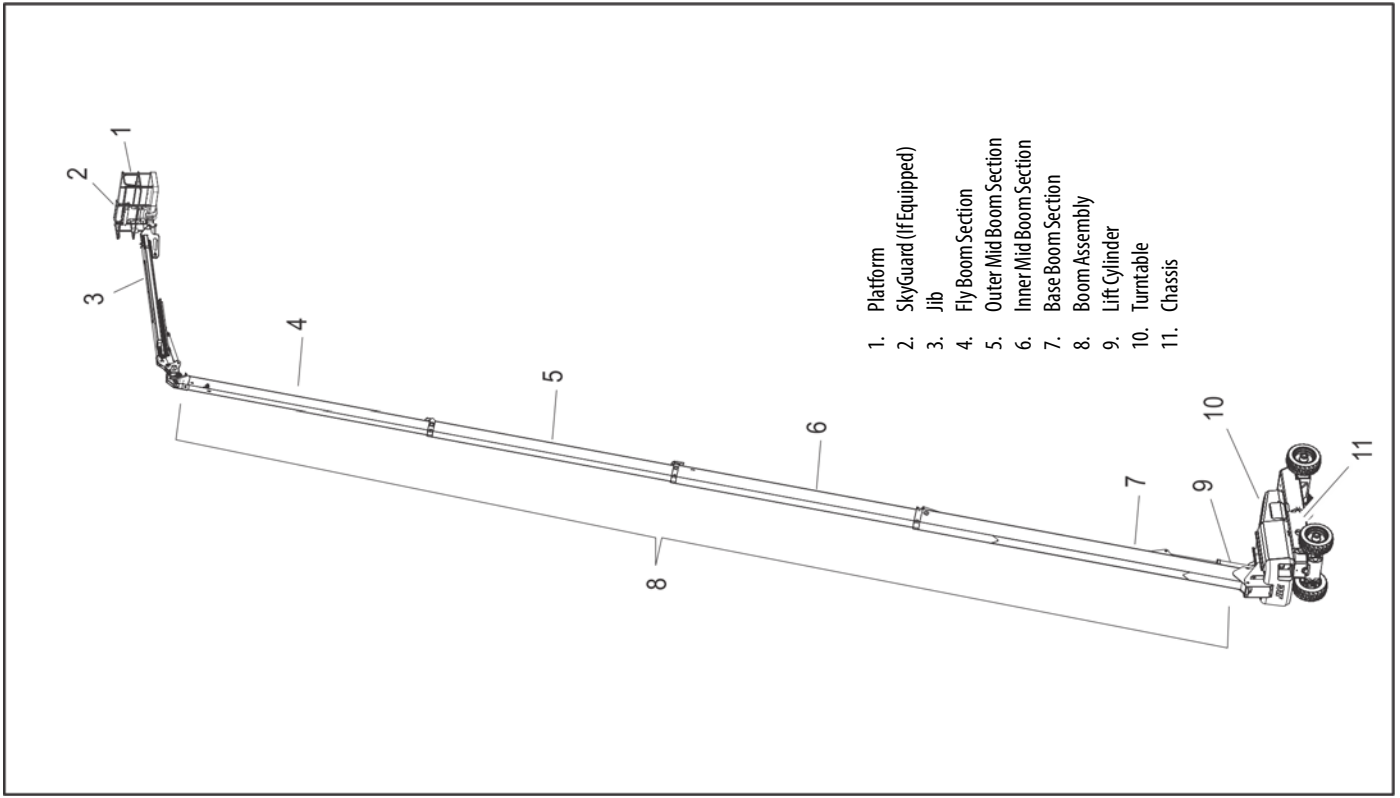

Figure 2-1. Basic Nomenclature - Sheet 1 of 3

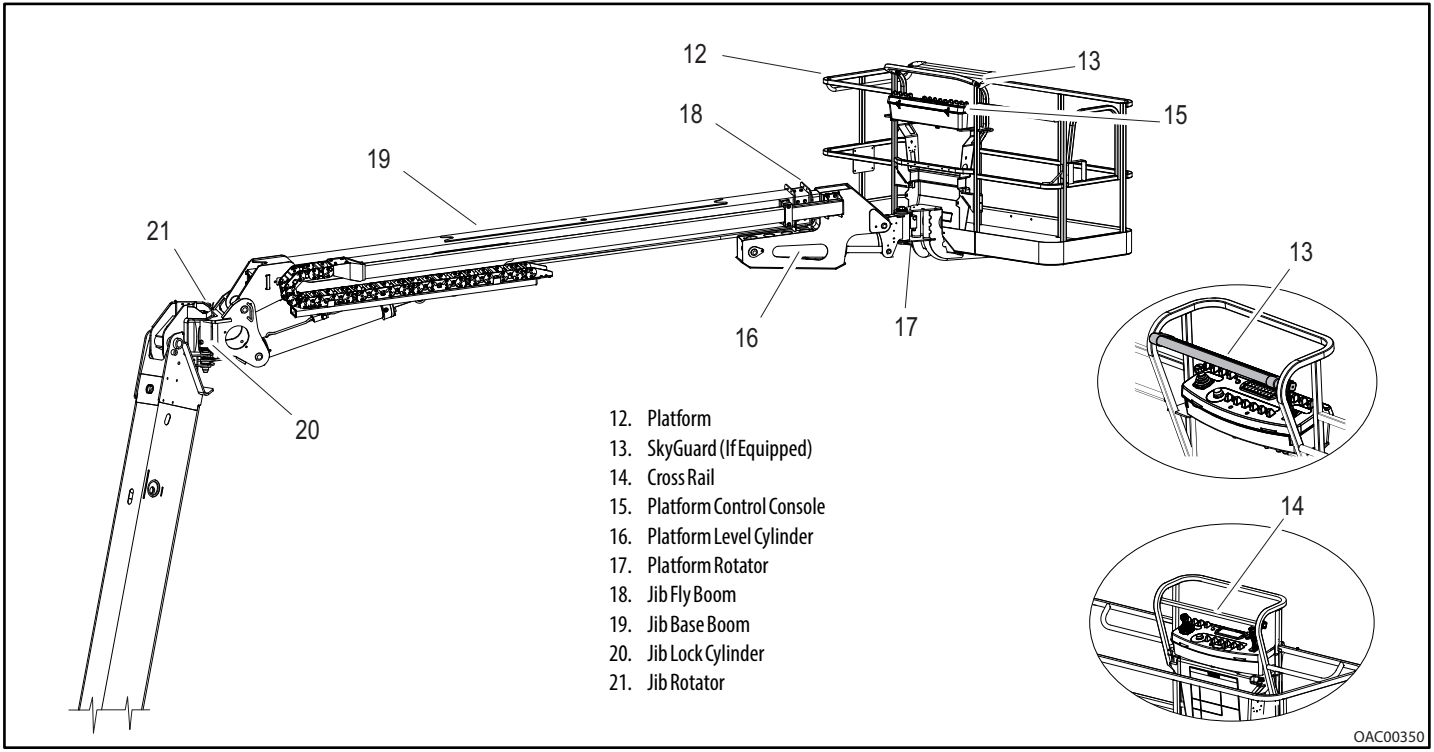

Figure 2-2. Basic Nomenclature - Sheet 2 of 3

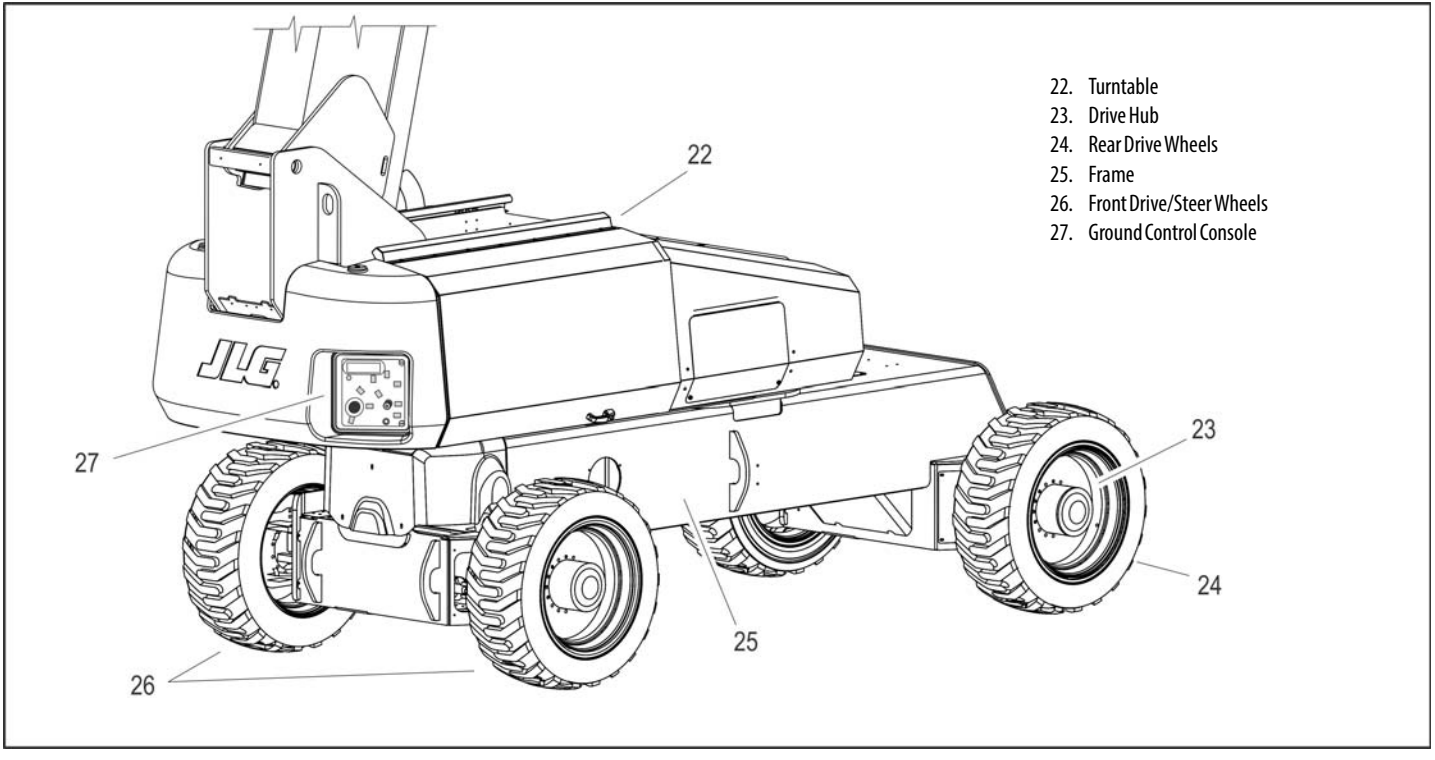

Figure 2-3. Basic Nomenclature - Sheet 3 of 3

Pre-Start Inspection

The Pre-Start Inspection should include each of the following:

1. **Cleanliness –** Check all surfaces for leakage (oil, fuel, or battery fluid) or foreign objects. Report any leakage to the proper maintenance personnel.
2. **Structure** - Inspect the machine structure for dents, damage, weld or parent metal cracks or other discrepancies.

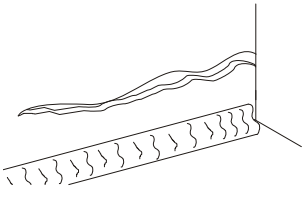

Parent Metal Crack

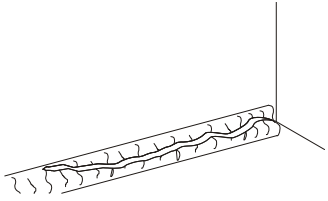

Weld Crack

3. **Decals and Placards** – Check all for cleanliness and legibility. Make sure none of the decals and placards are missing. Make sure all illegible decals and placards are cleaned or replaced.
4. **Operation and Safety Manuals** – Make sure a copy of the Operation and Safety Manual, AEM Safety Manual (ANSI markets only), and ANSI Manual of Responsibilities (ANSI markets only) is enclosed in the weather resistant storage container.
5. **Daily Walk-Around Inspection** – Perform as instructed.
6. **Battery –** Charge as required.
7. **Fuel** (Combustion Engine Powered Machines) – Add the proper fuel as necessary.
8. **Engine Oil Supply** - Ensure the engine oil level is at the Full mark on the dipstick and the filler cap is secure.
9. **Hydraulic Oil** – Check the hydraulic oil level. Ensure hydraulic oil is added as required.
10. **Accessories/Attachments** - Refer to the Accessories section in this manual or the accessory installed upon the machine for specific inspection, operation, and maintenance instructions.
11. **Function Check** – Once the Walk-Around Inspection is complete, perform a functional check of all systems in an area free of overhead and ground level obstructions. Refer to Section 4 for more specific operating instructions.
12. **Boom Control System Check -** Perform a check of the boom control system as specified in this section.

⚠ WARNING

IF THE MACHINE DOES NOT OPERATE PROPERLY, TURN OFF THE MACHINE IMMEDIATELY! REPORT THE PROBLEM TO THE PROPER MAINTENANCE PERSONNEL. DO NOT OPERATE THE MACHINE UNTIL IT IS DECLARED SAFE FOR OPERATION.

Daily Walk-Around Inspection

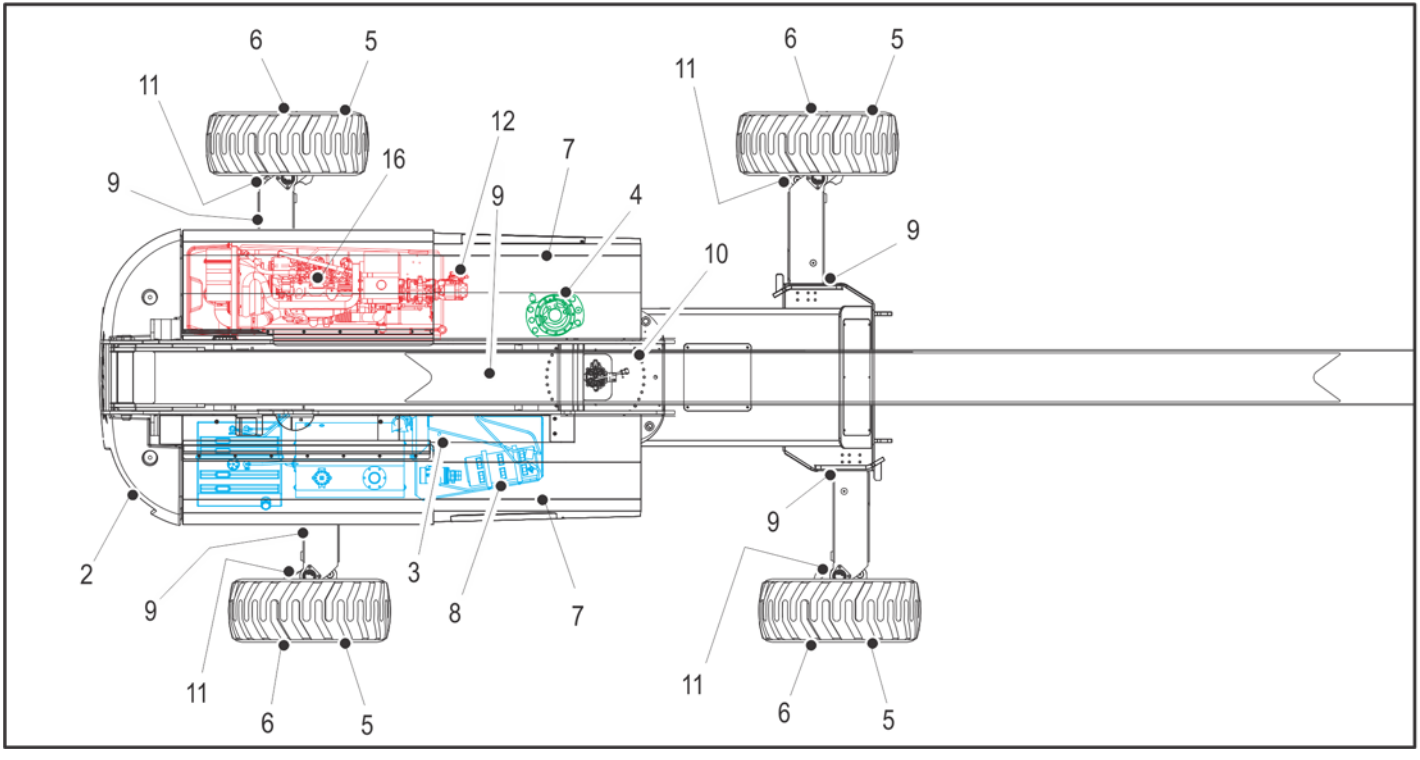

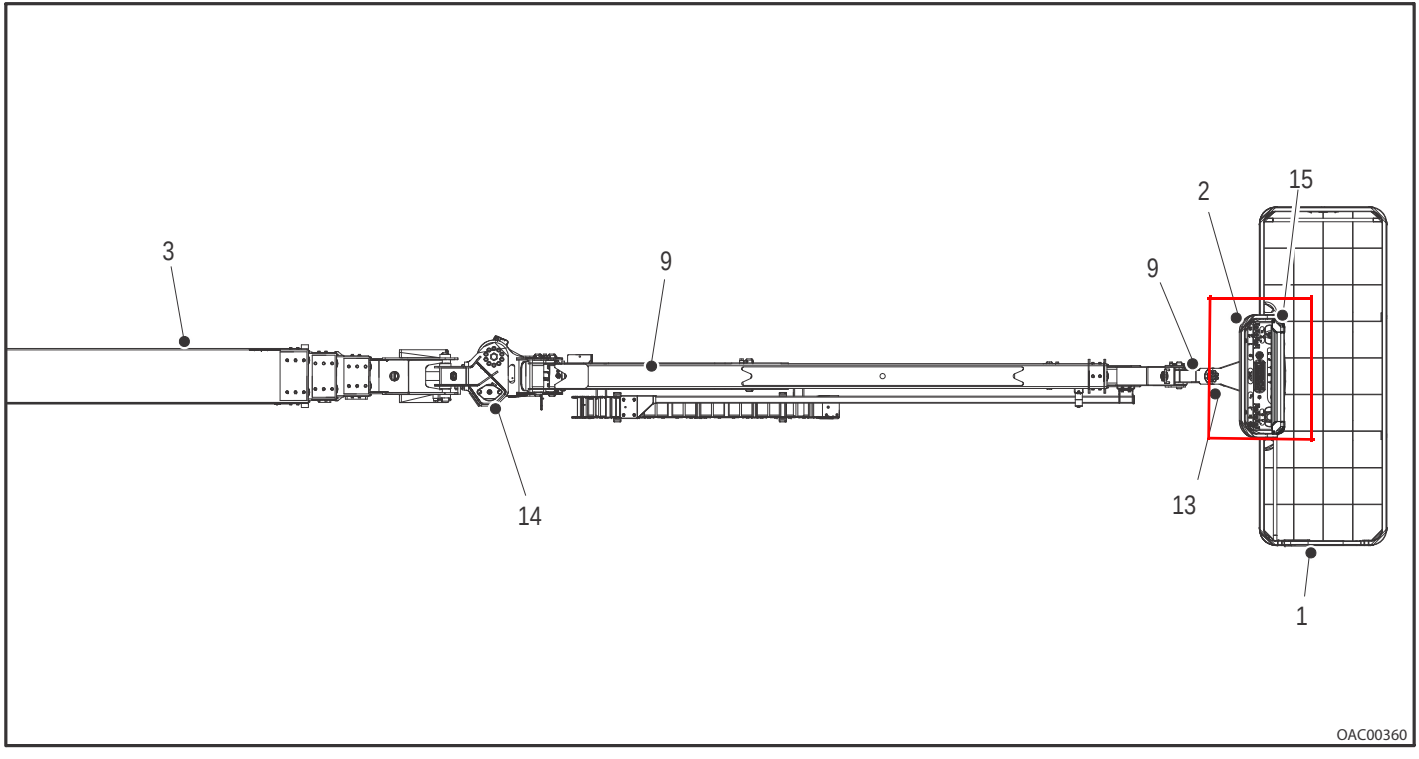
3
9
9
2
15
14
13
1
OAC00360

General

Begin the "Walk-Around Inspection" at Item 1, as noted on the diagram. Continue checking each item in sequence for the conditions listed in the following checklist.

⚠ WARNING

TO AVOID POSSIBLE INJURY, BE SURE MACHINE POWER IS OFF.

DO NOT OPERATE MACHINE UNTIL ALL MALFUNCTIONS HAVE BEEN CORRECTED.

***INSPECTION NOTE**: On all components, make sure there are no loose or missing parts, that they are securely fastened, and no visible damage, leaks or excessive wear exists in addition to any other criteria mentioned.*

1. **Platform Assembly and Gate** - Footswitch works properly, not modified, disabled or blocked. Gate latch and hinges in working condition.
2. **Platform & Ground Control Consoles** - Switches and levers return to neutral, decals/placards secure and legible, control markings legible.
3. **Boom Sections/Turntable** - See Inspection Note.
4. **Swing Drive** - No evidence of damage.
5. **Wheel/Tire Assemblies** - Properly secured, no missing lug nuts. Inspect for worn tread, cuts, tears or other discrepancies. Inspect wheels for damage and corrosion.
6. **Drive Motor, Brake, and Hub** - No evidence of leakage.
7. **Hood Assemblies** - See Inspection Note.
8. **Auxiliary Hydraulic Pump** - See Inspection Note.
9. **All Hydraulic Cylinders** - No visible damage; pivot pins and hydraulic hoses undamaged, not leaking.
10. **Turntable Bearing** - Evidence of proper lubrication. No evidence of loose bolts or looseness between bearing and machine.
11. **Steering Spindles and Sensors** - See Inspection Note.
12. **Hydraulic Pump** - See Inspection Note.
13. **Platform Rotator** - See Inspection Note.
14. **Jib Rotator and Jib Lock Cylinder** - See Inspection Note.
15. **SkyGuard (If Equipped)** - See Inspection Note.
16. **Air Shutoff Valve (ASOV) (If Equipped)** - See Inspection Note.

Function Check

Perform the Function Check as follows:

1. From the ground control console with no load in the platform:
   a. Check that all guards protecting the switches or locks are in place.
   b. Operate all functions and ensure proper operation.
   c. Check auxiliary power and ensure proper operation.
   d. Ensure that all machine functions are disabled when the Emergency Stop Button is pushed in.
   e. Ensure all boom functions stop when the function enable switch is released.
   f. Raise main boom approximately horizontal, then extend and retract boom sections. All boom sections should extend/retract together at the same rate of speed. Any difference would indicate delayed movement and loose wire ropes.

⚠ WARNING

IF DELAYED MOVEMENT IS DETECTED IN WIRE ROPE OPERATION, LOWER PLATFORM TO STOWED POSITION, SHUT DOWN MACHINE, AND HAVE WIRE ROPES INSPECTED/ SERVICED BY A QUALIFIED JLG MECHANIC. LOOSE OR MISADJUSTED WIRE ROPES COULD RESULT IN SERIOUS INJURY OR DEATH.

2. Check the Boom Control System. Refer to Boom Control System Check Procedure later in this section.
3. From the platform control console:
   a. Ensure that the control console is firmly secured in the proper location.
   b. Check that all guards protecting the switches or locks are in place.
   c. Operate all functions and ensure proper operation.
   d. Ensure that all machine functions are disabled when the Emergency Stop Button is pushed in.
   e. Ensure that all machine functions stop when the footswitch is released.
   f. Raise main boom approximately horizontal, then extend and retract boom sections. All boom sections should extend/retract together at the same rate of speed. Any difference would indicate delayed movement and loose wire ropes.

⚠ WARNING

IF DELAYED MOVEMENT IS DETECTED IN WIRE ROPE OPERATION, LOWER PLATFORM TO STOWED POSITION, SHUT DOWN MACHINE, AND HAVE WIRE ROPES INSPECTED/ SERVICED BY A QUALIFIED JLG MECHANIC. LOOSE OR MISADJUSTED WIRE ROPES COULD RESULT IN SERIOUS INJURY OR DEATH.

4. With the platform in the stowed position:
   a. Drive the machine on a grade, not to exceed the rated gradeability, and stop to ensure the brakes hold.
   b. Check that the tilt indicator is illuminated to ensure proper operation.
   c. Check that the boom telescope (beyond transport mode), lift up (more than 6° above horizontal), and swing (beyond 40° from center) functions are disabled with the axles retracted.

5. With the jib inline with the boom and locked, make sure the jib will not unlock unless:
   a. The machine is in transport position (booms retracted; main boom below elevation [5 degrees]; jib boom below 40 degrees; axles retracted).
   b. The boom capacity select switch is in 500# mode.

6. With the jib in the stowed position, make sure the jib will not swing unless:
   a. The jib is fully retracted.
   b. The machine is in transport position (booms retracted; main boom below elevation [4 degrees]; jib boom below 40 degrees; axles retracted).
   c. The boom capacity select switch is in 500# mode.

7. Extend the axles and swing the boom over either of the rear tires and ensure that the Drive Orientation indicator illuminates and that the Drive Orientation Override switch must be used for the drive function to operate.

Boom Control System Check Procedure

Perform the following check with no load (personnel or material) in the platform from the ground control station.

1. Extend all axles fully.
2. With the boom fully retracted, raise the boom off the boom rest to horizontal.
3. Position the jib horizontal and fully retracted, jib straight and locked, and platform level.
4. Extend the boom until it stops.
5. Boom must stop on colored stripe matching the capacity indicator. If the boom does not stop on the correct stripe, the system must be repaired by JLG authorized Service Personnel before the machine can be used.

6. Push and hold the gray Boom Control System Test Button on the ground control panel. The lighting of the green Boom Control System Calibrated indicator indicates the system is functioning properly. No indicator light or the lighting of the red Boom Control System Warning indicator indicates the system must be repaired by JLG authorized Service Personnel before the machine can be used.

SkyGuard Function Test

NOTE: *Refer to Section 4.10 for additional information on SkyGuard operation.*

From the Platform Console in an area free from obstructions:

1. Operate the telescope out function.
2. Activate the SkyGuard sensor:
   a. **SkyGuard -** Apply approximately 50 lb (222 Nm) of force to yellow bar.
   b. **SkyGuard - SkyLine -** Press cable to break magnetic connection between the cable and right bracket.
   c. **SkyGuard - SkyEye -** Put arm or hand in path of sensor beam.
3. Once the sensor has been activated, verify the following conditions:
   a. Telescope out function stops and telescope in function operates for a short duration.
   b. The horn sounds.
   c. If equipped with a SkyGuard beacon, the beacon illuminates.

NOTE: *If SkyGuard is enabled with the Soft Touch system, functions will cut out instead of reversing.*

4. Disengage the SkyGuard sensor, release controls, then recycle the footswitch. Ensure normal operation is available.

NOTE: *On machines equipped with SkyLine, reattach magnetic end of the cable to the bracket.*

If SkyGuard remains activated after function reversal or cutout, depress and hold the SkyGuard Override Switch to allow normal use of machine functions until the sensor is disengaged.

2.3 OSCILLATING AXLE LOCKOUT TEST (IF EQUIPPED)

The front axles will oscillate when the boom is in the transport position (i.e. when the boom is less than 6° above horizontal and not extended beyond 12" [30.4 cm]) and drive is selected.

NOTICE

LOCKOUT SYSTEM TEST MUST BE PERFORMED QUARTERLY, ANY TIME A SYSTEM COMPONENT IS REPLACED, OR WHEN IMPROPER SYSTEM OPERATION IS SUSPECTED.

NOTE: *Ensure the axles are extended and the boom is fully retracted, lowered, and centered between the rear wheels prior to beginning lockout cylinder test.*

1. Place a 6 inches (15.2 cm) high block with ascension ramp in front of left front wheel.
2. From platform control station, start engine.
3. Place the Drive control lever to the forward position and carefully drive machine up ascension ramp until left front wheel is on top of block.
4. Carefully extend the boom just enough to get it out of the transport position.
5. With boom in this position, place Drive control lever to Reverse and carefully drive machine off of block and ramp.
6. Have an assistant check to see that left front or right rear wheel remains elevated in position off of the ground.
7. Carefully return the boom to the transport position. When boom reaches the transport position, carefully activate Drive to release cylinders. The lockout cylinders should release and allow the wheel to rest on ground.
8. Repeat the procedure for the right oscillation cylinder checking to see that the right front or left rear wheel remains elevated in position off of the ground.
9. If lockout cylinders do not function properly, have qualified personnel correct the malfunction prior to any further operation.

SECTION 3. MACHINE CONTROLS AND INDICATORS

3.1 GENERAL

NOTICE

THE MANUFACTURER HAS NO DIRECT CONTROL OVER MACHINE APPLICATION AND OPERATION. THE USER AND OPERATOR ARE RESPONSIBLE FOR CONFORMING WITH GOOD SAFETY PRACTICES.

This section provides the necessary information needed to understand control functions.

3.2 CONTROLS AND INDICATORS

NOTE: *All machines are equipped with control panels that use symbols to indicate control functions. On ANSI machines refer to decal located on the control box guard in front of the control box or by the ground controls for these symbols and the corresponding functions.*

NOTE: *The indicator panels use different shaped symbols to alert the operator to different types of operational situations that could arise. The meaning of those symbols are explained below.*

Indicates a potentially hazardous situation, which if not corrected, could result in serious injury or death. This indicator will be red.

Indicates an abnormal operating condition, which if not corrected, may result in machine interruption or damage. This indicator will be yellow.

Indicates important information regarding the operating condition, i.e. procedures essential for safe operation. This indicator will be green with the exception of the capacity indicator which will be green or yellow depending upon platform position.

⚠ WARNING

TO AVOID SERIOUS INJURY, DO NOT OPERATE MACHINE IF ANY CONTROL LEVERS OR TOGGLE SWITCHES CONTROLLING PLATFORM MOVEMENT DO NOT RETURN TO THE OFF POSITION WHEN RELEASED.

Ground Control Station

See Figure 3-1., Ground Control Station and Figure 3-2., Ground Control Station with Machine Safety System Override (MSSO) (CE Only).

NOTE: *The Function Enable switch must be held down in order to operate Main Boom Telescope, Swing, Main Lift, Jib Lift, Platform Level Override, Platform Rotate, and Jib Telescope functions.*

1. Indicator Panel

The Indicator Panel contains indicator lights that signal problem conditions or functions operating during machine operation.

2. Jib Telescope Control

Provides extension and retraction of the jib.

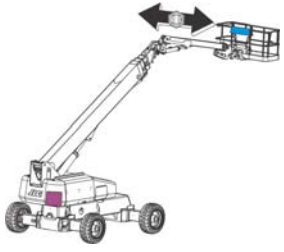

3. Platform Rotate

Provides rotation of the platform.

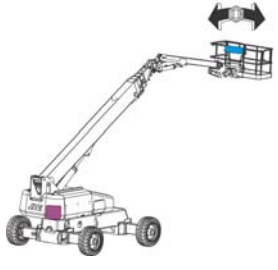

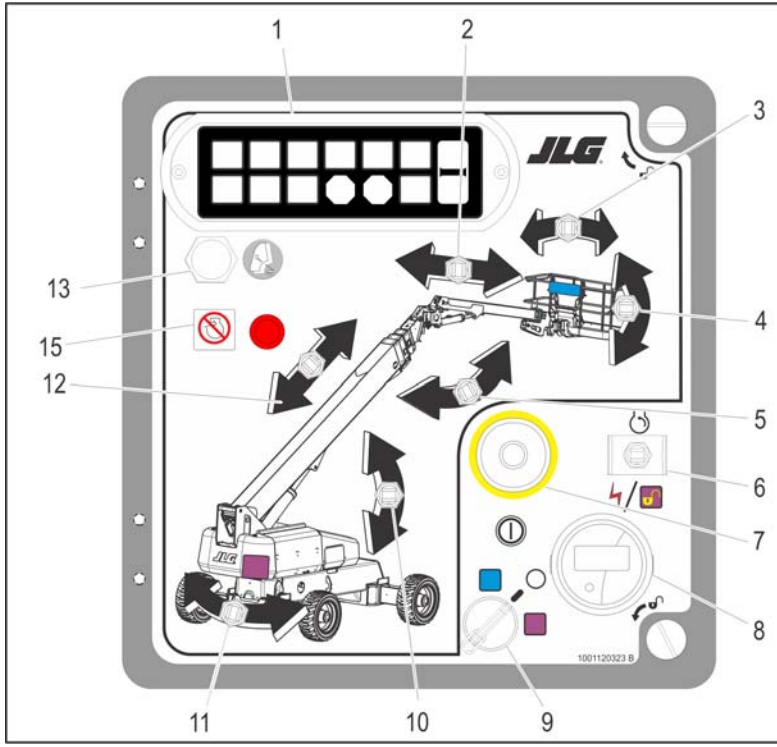

1. Indicator Panel
2. Jib Telescope Control
3. Platform Rotate
4. Platform Leveling Override
5. Jib Lift
6. Engine Start/Auxiliary Power Switch/Function Enable
7. Power/Emergency Stop
8. Hourmeter
9. Platform/Ground Select
10. Lift
11. Swing
12. Telescope
13. Boom Control System Test
14. Not Used
15. Air Shutoff Valve (ASOV) (If Equipped)

Figure 3-1. Ground Control Station

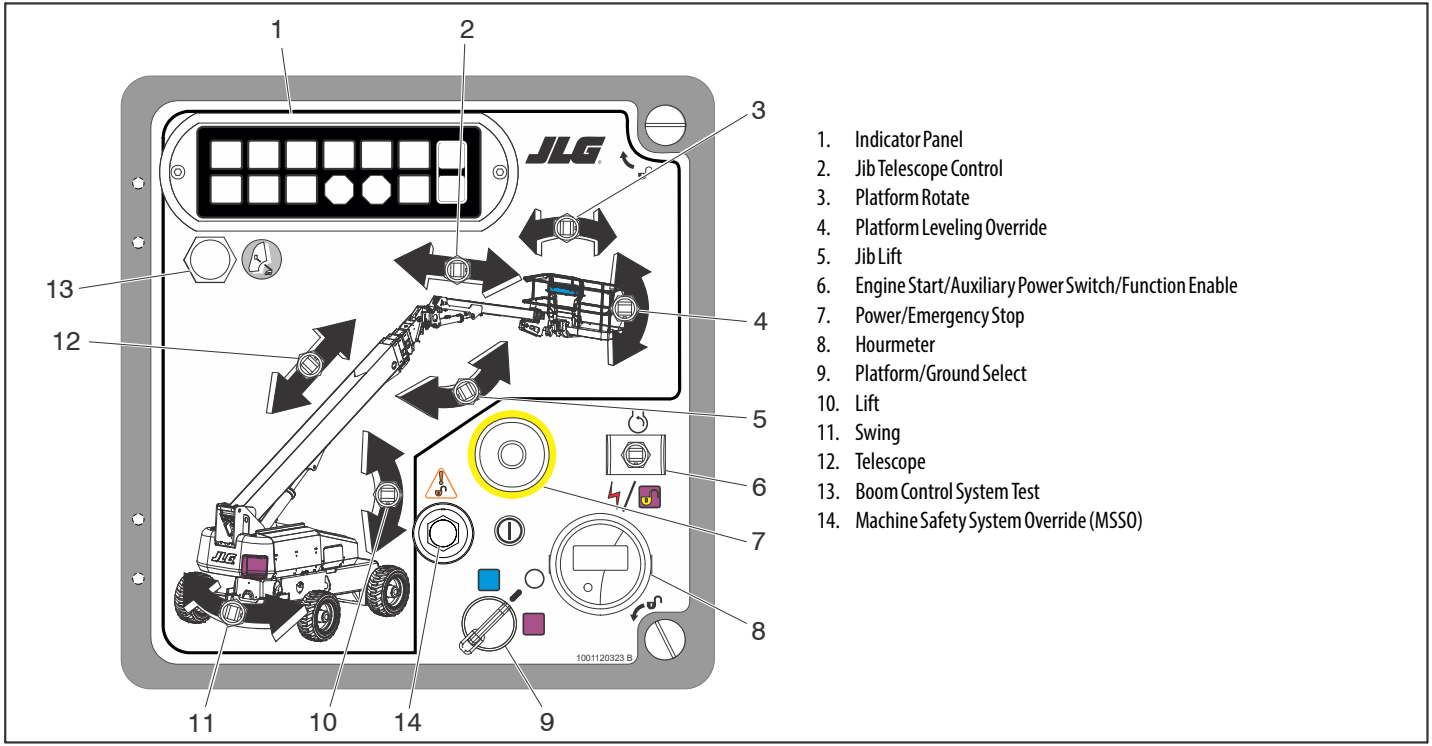

1. Indicator Panel
2. Jib Telescope Control
3. Platform Rotate
4. Platform Leveling Override
5. Jib Lift
6. Engine Start/Auxiliary Power Switch/Function Enable
7. Power/Emergency Stop
8. Hourmeter
9. Platform/Ground Select
10. Lift
11. Swing
12. Telescope
13. Boom Control System Test
14. Machine Safety System Override (MSSO)

Figure 3-2. Ground Control Station with Machine Safety System Override (MSSO) (CE Only)

⚠ WARNING

ONLY USE THE PLATFORM LEVELING OVERRIDE FUNCTION FOR SLIGHT LEVELING OF THE PLATFORM. INCORRECT USE COULD CAUSE THE LOAD/OCCUPANTS TO SHIFT OR FALL. FAILURE TO DO SO COULD RESULT IN DEATH OR SERIOUS INJURY.

4. Platform Leveling Override

A three position switch allows the operator to adjust the automatic self leveling system. This switch is used to adjust platform level in situations such as ascending/ descending a grade.

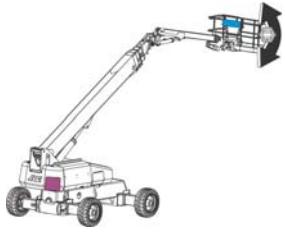

5. Jib Lift

Provides raising and lowering of the jib.

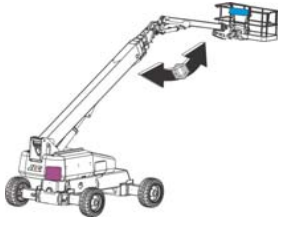

NOTE: *Auxiliary power only works if there is no engine oil pressure, and is disabled if engine is running.*

Functions will operate at a slower than normal rate because of the reduced hydraulic flow.

NOTICE

WHEN USING AUXILIARY POWER, DO NOT OPERATE MORE THAN ONE FUNCTION AT A TIME. SIMULTANEOUS OPERATION CAN OVERLOAD THE AUXILIARY PUMP.

6. Engine Start/ Auxiliary Power Switch /Function Enable

To start the engine, the switch must be held "UP" until the engine starts.

To use auxiliary power, the switch must be held “DOWN” for duration of auxiliary pump use.

When the engine is running, the switch must be held "DOWN" to enable all boom controls.

⚠ CAUTION

WHEN THE MACHINE IS SHUT DOWN THE POWER/EMERGENCY STOP SWITCH MUST BE POSITIONED TO THE OFF POSITION TO PREVENT DRAINING THE BATTERIES.

7. Power/Emergency Stop Switch

A two-position red mushroom shaped switch supplies power to PLATFORM/GROUND SELECT switch when pulled out (on). When pushed in (off), power is shut off to the PLATFORM/GROUND SELECT switch.

8. Hourmeter

Registers the amount of time the machine has been in use, with engine running. In the event of a fault, the hourmeter also displays the three digit fault code. Refer to the Service Manual for a listing of fault codes. Additionally, there is a small, red indicator light that will blink when there is a fault on the machine to draw operator attention to the display.

NOTE: *With PLATFORM/GROUND SELECT switch in the center position, power is shut off to controls at both operating stations.*

9. Platform/Ground Select Switch

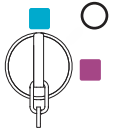

A three position, key operated switch supplies power to the platform control console when positioned to Platform. With the switch key positioned in the Ground position, power is shut off to platform and only ground controls are operable.

10. Lift Control

Provides raising and lowering of the main boom.

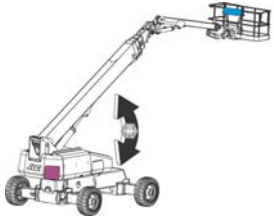

11. Swing Control

Provides 360 degrees continuous turntable rotation.

12. Main Telescope Control

Provides extension and retraction of the main boom.

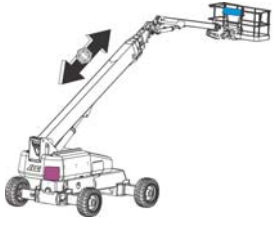

13. Boom Control System Test Button

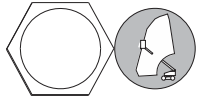

The push button is used to test the boom control system and confirm that it is working properly.

14. Machine Safety System Override (MSSO) (CE Only)

Provides emergency override of function controls that are locked out in the event of Load Sense System Activation.

15. Air Shutoff Valve (ASOV) (If Equipped)

The red LED ASOV light indicates when the valve has been actuated.

Ground Control Indicator Panel

(See Figure 3-3., Ground Control Indicator Panel)

1. No Alternator Output Indicator

   Indicates a problem in the charging circuit, and service is required.

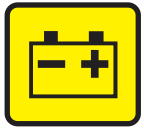

2. Low Engine Oil Pressure Indicator

   Indicates that engine oil pressure is below normal and service is required.

3. High Engine Temperature Indicator

   Indicates that engine coolant temperature is abnormally high and service is required.

4. Engine Oil Temperature Indicator

   Indicates the temperature of the engine oil, which also serves as engine coolant, is abnormally high and service is required.

5. Glow Plug Indicator

   Indicates the glow plugs are operating. After turning on ignition, wait until light goes out before cranking engine.

6. Axles Set Indicator

   Indicates that the axles are fully extended. The indicator will flash as the axles are extending or retracting and be on solid when fully extended. The light will go out when the axles are fully retracted.

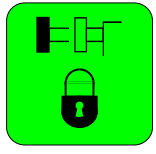

7. Platform Capacity Indicator

   Indicates which capacity range is selected. This capacity can only be selected at the platform control console.

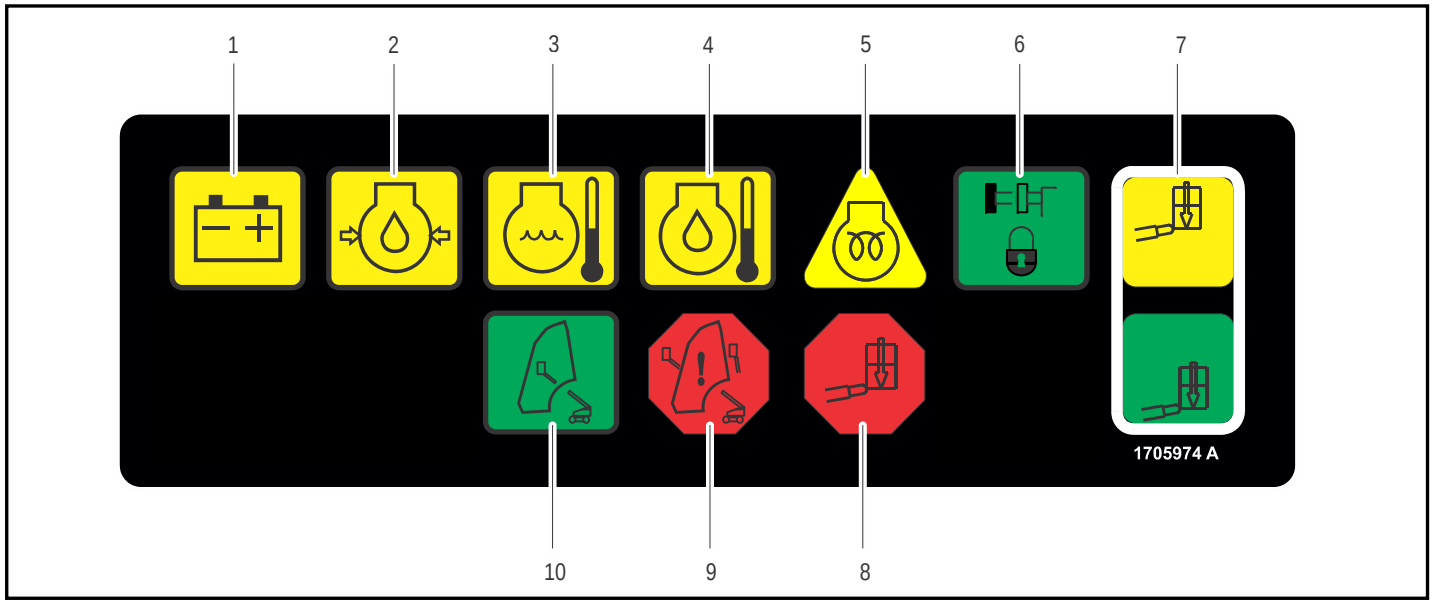

1. No Alternator Output
2. Low Engine Oil Pressure
3. High Engine Coolant Temperature
4. Engine Oil Temperature
5. Glow Plug Indicator
6. Axles Set
7. Platform Capacity
8. Platform Overload
9. Boom Control System Warning
10. Boom Control System Calibrated

Figure 3-3. Ground Control Indicator Panel

8. Platform Overload Indicator (If Equipped)

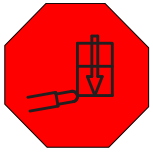

Indicates the platform has been overloaded.

9. Boom Control System Warning Indicator

Indicates the platform is outside the operating area and operation of certain boom functions may be disabled (i.e. lift, telescope). Attempts to use the disabled functions cause the indicator to flash and an alarm to sound. Immediately return the platform to the ground. If the indicator remains lit, a boom control system fault or failure has been detected. If a failure is discovered, the system must be repaired by JLG authorized service personnel before the machine can be used.

10. Boom Control System Calibrated Indicator

When the Boom Control System Test Button is pushed, illuminates to indicate that the Boom Control System is calibrated properly.

Platform Station

(See Figure 3-4., Platform Control Console)

⚠ WARNING

TO AVOID SERIOUS INJURY, DO NOT OPERATE MACHINE IF ANY CONTROL LEVERS OR TOGGLE SWITCHES CONTROLLING PLATFORM MOVEMENT DO NOT RETURN TO THE OFF OR NEUTRAL POSITION WHEN RELEASED.

1. Drive Speed/Torque Select

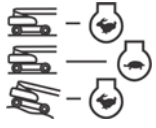

The forward position gives maximum drive speed. The back position gives maximum torque for rough terrain and climbing grades. The center position allows the machine to be driven as quietly as possible.

2. Steer Select

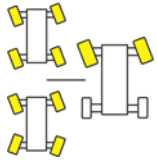

The action of the steering system is operator selectable. The center switch position gives conventional front wheel steering with the rear wheels unaffected. This is for normal driving at maximum speeds. The forward position is for “crab” steering. When in this mode both front and rear axles steer in the same direction, which allows the chassis to move sideways as it goes forward. This can be used for positioning the machine in aisle ways or close to buildings. The back switch position is for “coordinated” steering. In this mode the front and rear axles steer in the opposite directions to produce the tightest turning circle for maneuvering in confined areas.

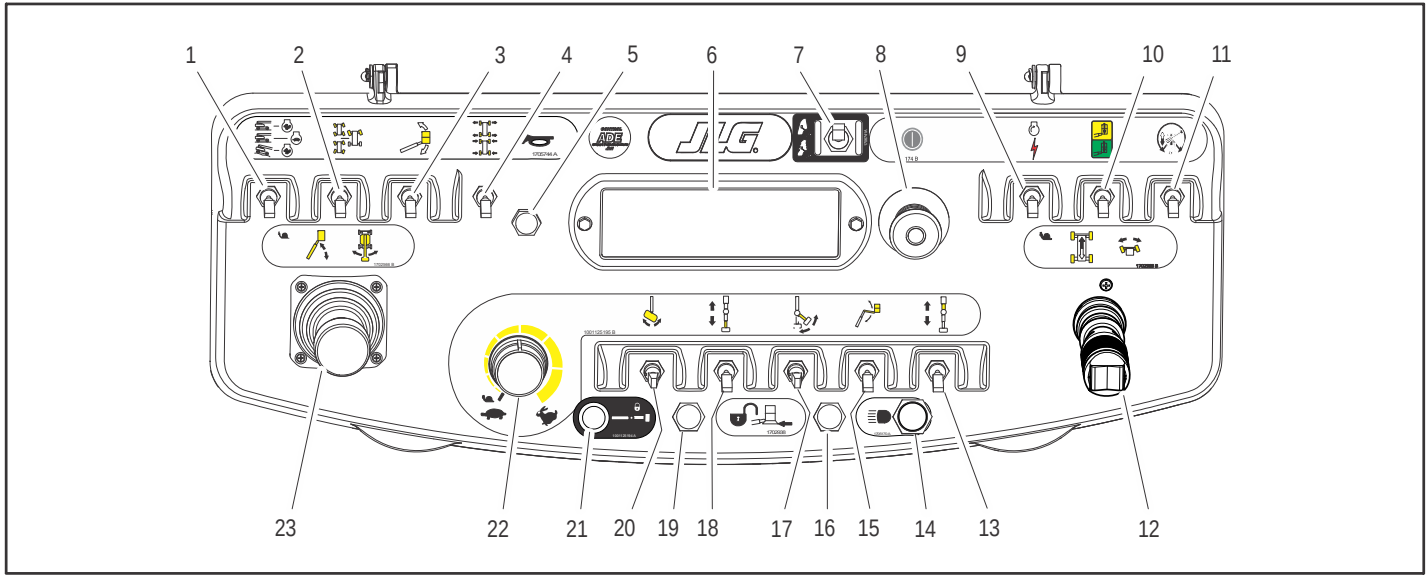

1. Drive Speed/Torque Select
2. Steer Select
3. Platform Leveling Override
4. Axle Extend/Retract
5. Horn
6. Indicator Panel
7. Boom Control Select
8. Power/Emergency Stop
9. Start/Auxiliary Power
10. Capacity Select
11. Drive Orientation Override
12. Drive/Steer
13. Main Telescope
14. Lights
15. Jib Lift
16. Soft Touch/SkyGuard Override
17. Jib Stow
18. Jib Telescope
19. Soft Touch/SkyGuard Indicator
20. Platform Rotate
21. Lock Pin Indicator
22. Function Speed Control
23. Main Lift/Swing

Figure 3-4. Platform Control Console

⚠ WARNING

ONLY USE THE PLATFORM LEVELING OVERRIDE FUNCTION FOR SLIGHT LEVELING OF THE PLATFORM. INCORRECT USE COULD CAUSE THE LOAD/OCCUPANTS TO SHIFT OR FALL. FAILURE TO DO SO COULD RESULT IN DEATH OR SERIOUS INJURY.

3. Platform Leveling Override

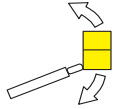

A three position switch allows the operator to adjust the automatic self leveling system. This switch is used to adjust platform level in situations such as ascending/descending a grade.

4. Axle Extend/Retract

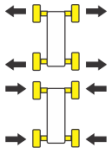

Allows the operator to extend or retract the axles. The axles can only be extended or retracted while the machine is being driven forward or reverse.

5. Horn

A push-type HORN switch supplies electrical power to an audible warning device when pressed.

6. Indicator Panel

The LED Indicator Panel contains indicator lights that signal problem conditions or functions operating during machine operation.

Within about 2 seconds of pulling the Power/Emergency Stop switch out, the machine will perform a diagnostic check of the various electrical circuits, and if everything is OK, the platform alarm will beep once. During this time the lights on the indicator panel will also blink once as a bulb check.

7. Boom Control Select

Automatic Mode:

When the Boom Control is positioned to Automatic, lift and telescope movements are coordinated by the JLG control system and the automatic platform leveling feature is active during lift, telescope, swing, and drive movements.

NOTE: *• While operating lift up, the boom may also telescope out.*
• While operating lift down, the boom may also telescope in.
• While operating swing or drive, the boom may lift up or lift down.
• While operating telescope in, the boom may lift down when at high boom angles and the creep light is flashing.

Manual Mode:

When the boom control is positioned to Manual, lift and telescope movements are controlled separately by the operator and the automatic platform leveling feature is active only during lift functions.

NOTE: *When positioned to Manual, boom functions will be stopped when the envelope limits are reached. When this occurs, operate a different function or select the automatic position.*

NOTE: *Depending upon the angle of the chassis and the angle of the boom, swing left or swing right may be disallowed while in the Manual mode. The BCS light will illuminate and further attempts to swing in the disallowed direction will cause the BCS to flash. When this occurs the only choices are to swing in the opposite direction or switch to automatic mode.*

8. Power/Emergency Stop

A two-position red mushroom shaped switch supplies power to Platform Controls when pulled out (on). When pushed in (off), power is shut off to the platform controls.

9. Start/Auxiliary Power

When pushed forward, the switch energizes the starter motor to start the engine.

When pushed back, it energizes the electrically operated hydraulic pump, when actuated. (Switch must be held on for duration of auxiliary pump use.)The auxiliary pump functions to provide sufficient oil flow to operate the basic machine functions should the main pump or engine fail. The auxiliary pump will operate platform rotate, jib lift, jib level, jib telescope, jib stow, platform level, main boom lift, main telescope and swing.

10. Capacity Select

This switch allows the operator to select between an operating envelope with a 500 lb. (227 kg for ANSI markets and 230 kg for CE and Australia markets) capacity restriction or a 1000 lb. (454 kg for ANSI markets and 450 kg for CE and Australia markets) capacity restriction.

11. Drive Orientation Override

When the boom is swung over the rear tires or further in either direction, the Drive Orientation indicator will illuminate when the drive function is selected. Push and release the switch, and within 3 seconds move the Drive/Steer control to activate drive or steer. Before driving, locate the black/white orientation arrows on both the chassis and the platform controls. Move the drive controls in a direction matching the directional arrows.

NOTE: *To operate the Drive Joystick, pull up on the locking ring below the handle.*

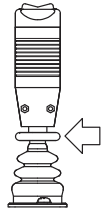

NOTE: *The DRIVE control levers are spring-loaded and will automatically return to neutral (OFF) position when released.*

12. Drive/Steer

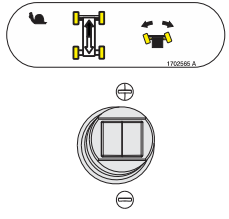

Push forward to drive forward, pull back to drive in reverse. Steering is accomplished via a thumb-activated rocker switch on the end of the steer handle.

13. Main Telescope

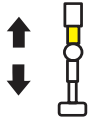

Provides extension and retraction of the main boom.

14. Lights (If Equipped)

Operates accessory light packages if the machine is so equipped.

15. Jib Lift

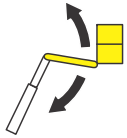

Provides raising and lowering of the jib.

16. Soft Touch/SkyGuard Override Switch (If equipped)

The machine can be equipped with one of three options. It may have Soft Touch, SkyGuard, or both Soft Touch and SkyGuard.

If equipped with Soft Touch, the switch enables the functions that were cut out by the Soft Touch system to operate again at creep speed, allowing the operator to move the platform away from the obstacle that caused the shutdown situation.

If equipped with SkyGuard, the switch enables functions cut out by the Skyguard system to be operated again, allowing the operator to resume use of machine functions.

If equipped with both Soft Touch and SkyGuard, the switch operates like described above and allows the operator to override the system that has experienced a cutout situation.

NOTICE

UPON ACTIVATING THE JIB STOW CONTROL SWITCH, A SLIGHT DELAY WILL BE EXPERIENCED BEFORE THE JIB WILL BEGIN TO MOVE.

17. Jib Stow

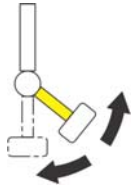

Allows the jib to be returned to the stowed position for transport and also taken out of the transport position for machine usage. This control operates both jib swing and the jib lock pin in a coordinated manner.

NOTE: *The Jib Telescope function only operates in the 500 lb. (227 kg for ANSI markets and 230 kg for CE and Australia markets) capacity mode.*

18. Jib Telescope

Provides extension and retraction of the jib.

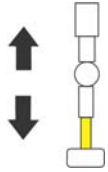

19. Soft Touch/SkyGuard Indicator (If Equipped)

Indicates the Soft Touch bumper is against an object or the SkyGuard sensor has been activated. All controls are cut out until the override button is pushed. For Soft Touch, controls are then active in the Creep Mode or for SkyGuard, controls will work normally.

20. Platform Rotate

Allows the operator to rotate the platform to the left or right.

21. Lock Pin Indicator

When illuminated, indicates the jib is centered and the jib lock pin is engaged. When blinking, indicates the jib is in the process of being stowed or centered. The indicator is off when the lock pin is disengaged and the jib is stowed (machine in transport position).

22. Function Speed Control

This control affects the speed of main boom telescope, jib telescope, and jib lift. Turning the knob all the way counterclockwise until it clicks puts drive, main lift, platform rotate, and swing into creep mode.

NOTE: *To operate the Main Boom Lift/Swing joystick, pull up on the locking ring below the handle.*

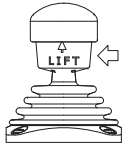

NOTE: *The Main Boom Lift/Swing joystick is spring loaded and will automatically return to neutral (off) position when released.*

23. Main Lift/Swing Controller

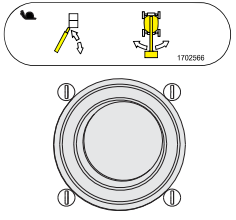

Provides main lift and swing. Push forward to lift up, pull backward to boom down. Move right to swing right, move left to swing left. Moving the joystick activates switches to provide the functions selected.

Platform Control Indicator Panel

(See Figure 3-5., Platform Control Indicator Panel)

1. Level System Fault Indicator

Indicates a fault in the electronic leveling system. The fault indicator will flash and an alarm sound. All functions will default to creep if the boom is out of transport mode.

⚠ WARNING

IF THE LEVEL SYSTEM FAULT INDICATOR IS ILLUMINATED, SHUT DOWN THE MACHINE, RESET THE EMERGENCY STOP, AND RESTART THE MACHINE. IF THE FAULT PERSISTS, RETURN THE PLATFORM TO THE STOWED POSITION, USING MANUAL LEVELING AS REQUIRED, AND HAVE LEVELING SYSTEM REPAIRED.

2. AC Generator (If Equipped)

Indicates the generator is in operation.

3. Platform Overload Indicator (If Equipped)

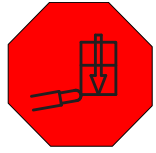

Indicates the platform has been overloaded.

4. Platform Capacity Indicator

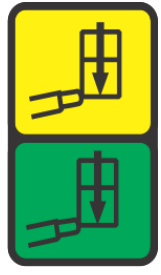

Indicates the maximum platform capacity selected for the platform.

One of the capacity lights should be on at all times. Both lights will flash and an alarm will sound if the platform is out of the operating envelope for the selected capacity.

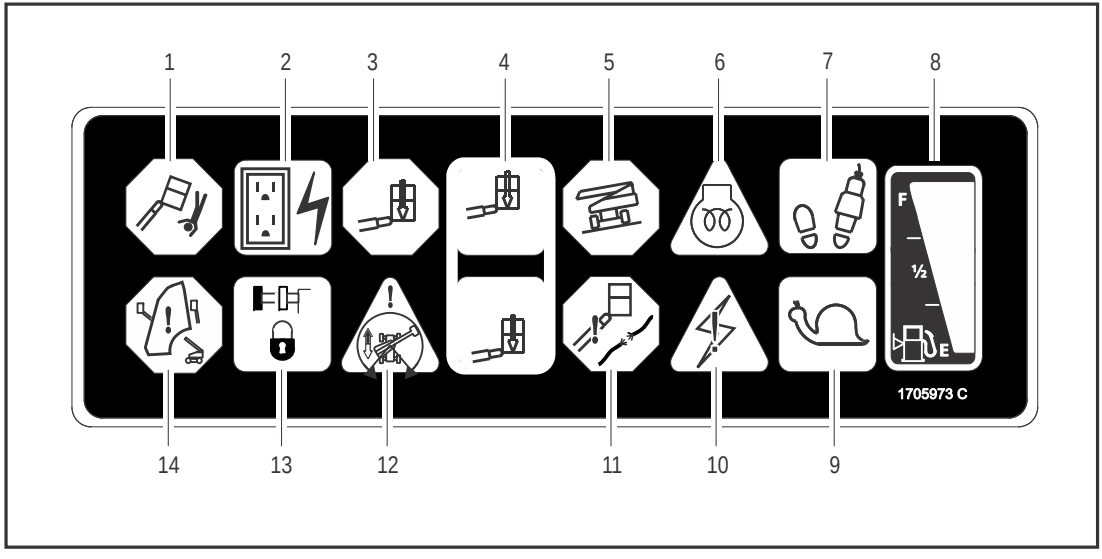

1. Level System
2. AC Generator
3. Platform Overload
4. Platform Capacity
5. Tilt Alarm Warning
6. Glow Plug
7. Enable
8. Fuel Level
9. Creep Speed
10. System Distress
11. Cable Service
12. Drive Orientation
13. Axles Set
14. Boom Control System Warning

Figure 3-5. Platform Control Indicator Panel

5. Tilt Alarm Warning Light

⚠ WARNING

IF ILLUMINATED WHEN BOOM IS RAISED OR EXTENDED, RETRACT AND LOWER TO BELOW HORIZONTAL THEN REPOSITION MACHINE SO THAT IT IS LEVEL BEFORE EXTENDING BOOM OR RAISING BOOM FROM THE TRANSPORT POSITION.

Indicates that the chassis is on a slope. If the boom is out of transport position and the machine is on a slope, an alarm will sound and CREEP is automatically activated.

6. Glow Plug/Wait to Start Indicator

NOTE: *If the engine fails to start due to cold temperatures or excessive amounts of smoke are produced on startup, wait for the glow plug/wait to start indicator to go out before starting the engine.*

Indicates the glow plugs are operating. After turning on ignition, wait until light goes out before starting engine.

7. Footswitch/Enable Indicator

⚠ WARNING

TO AVOID SERIOUS INJURY, DO NOT REMOVE, MODIFY OR DISABLE THE FOOTSWITCH BY BLOCKING OR ANY OTHER MEANS.

⚠ WARNING

FOOTSWITCH MUST BE ADJUSTED IF FUNCTIONS ACTIVATE WHEN SWITCH ONLY OPERATES WITHIN LAST 1/4" OF TRAVEL, TOP OR BOTTOM.

To operate any function, the footswitch must be depressed and the function selected within seven seconds. The enable indicator shows that the controls are enabled. If a function is not selected within seven seconds, or if a seven second lapse between ending one function and beginning the next function, the enable light will go out and the footswitch must be released and depressed again to enable the controls.

Releasing the footswitch removes power from all controls and applies the drive brakes.

NOTE: *Refer to Fuel Reserve/Shut-Off System in Section 4 for more detailed information concerning the Low Fuel Indicator.*

8. Fuel Level Indicator

Indicates the level of fuel in the fuel tank.

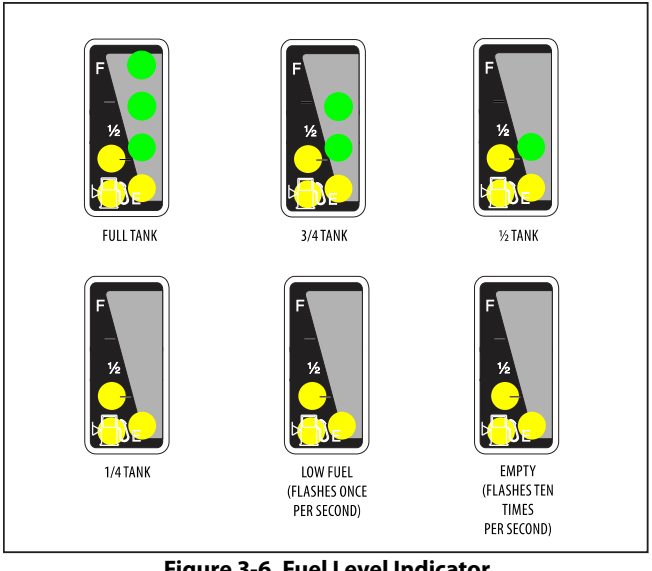

Figure 3-6. Fuel Level Indicator

9. Creep Speed Indicator

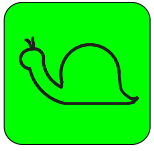

When the Function Speed Control is turned to the creep position, the indicator acts as a reminder that all functions are set to the slowest speed. The light flashes if the control system puts the machine into creep speed and will be on continuously if the operator selects creep speed.

10. System Distress Indicator

The light indicates that the JLG Control System has detected an abnormal condition and a Diagnostic Trouble Code has been set in the system memory. Refer to the Service Manual for instructions concerning the trouble codes and trouble code retrieval.

The malfunction indicator light will illuminate for 2-3 seconds when the key is positioned to the on position to act as a self test.

11. Cable Service Indicator

When illuminated, the light indicates the boom cables are loose or broken and must be repaired or adjusted immediately.

12. Drive Orientation Indicator

When the boom is swung beyond the rear drive tires or further in either direction, the Drive Orientation indicator will illuminate when the drive function is selected. This is a signal for the operator to verify that the drive control is being operated in the proper direction (i.e. controls reversed situations).

13. Axles Set Indicator

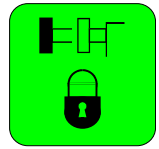

Indicates that the axles are fully extended. The indicator will flash as the axles are extending or retracting and be on solid when fully extended. The light will go out when the axles are fully retracted.

14. Boom Control System Warning Indicator

Indicates the platform is outside the operating area and operation of certain boom functions may be disabled (i.e. lift, telescope). Attempts to use the disabled functions cause the indicator to flash and an alarm to sound. Immediately return the platform to the ground. If the indicator remains lit, a boom control system fault or failure has been detected. If a failure is discovered, the system must be repaired by JLG authorized service personnel before the machine can be used.

NOTES:

SECTION 4. MACHINE OPERATION

4.1 DESCRIPTION

This machine is a self-propelled hydraulic personnel lift equipped with a work platform on the end of an elevating and rotating boom.

The primary operator control station is in the platform. From this control station, the operator can drive and steer the machine in both forward and reverse directions. The operator can raise or lower the boom or swing the boom to the left or right. Standard boom swing is 360 degree continuous rotation. The machine has a Ground Control Station which will override the Platform Control Station. Ground Controls operate Boom Lift and Swing, and are to be used in an emergency to lower the platform to the ground should the operator in the platform be unable to do so.

4.2 BOOM OPERATING CHARACTERISTICS AND LIMITATIONS

Capacities

Raising boom above horizontal with or without any load in platform, is based on the following criteria:

1. Machine is positioned on a smooth, firm and level surface.
2. Axles are fully extended.
3. Jib is centered and lock pin is engaged.
4. Load is within manufacturer's rated capacity.
5. All machine systems are functioning properly.
6. Proper tire pressure.
7. Machine is as originally equipped from JLG.

Controlled Arc

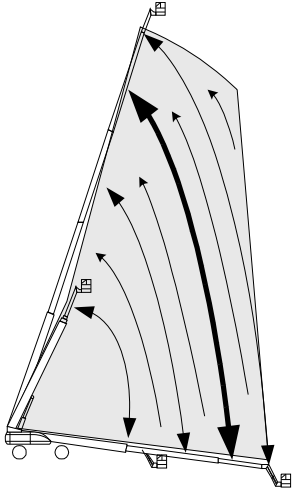

Controlled Arc Boom Movement

When the Boom Control Select switch is in the automatic mode, the Boom Control System automatically controls lift and telescope when the lift function is selected to move the platform through a predetermined arc, equivalent to the percentage of extension. (i.e. If you start at 70% boom extension, you will end up at approximately 70% boom extension no matter where you stop in the arc). This means that when lifting down, telescope in will function automatically, or when lifting up, telescope out will function automatically.

When the Boom Control Switch is in the manual mode, lift and telescope functions are independent functions controlled by the operator.

Envelope Tracking

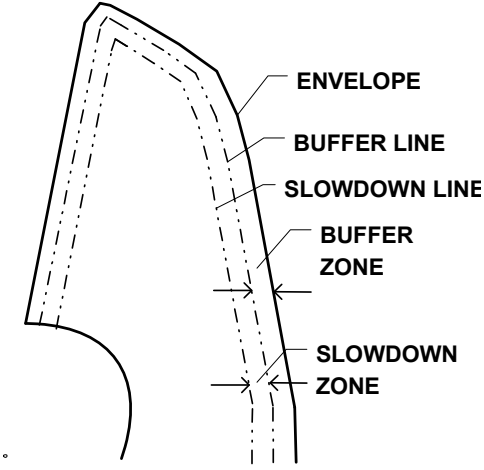

When the platform approaches the edges of the operating envelope all machine functions are slowed down except jib and platform functions, telescope in or out at the rearward edge and telescope in or out on the forward edge are slowed down automatically by the boom control system to reduce machine motions.

NOTE: *Boom Control System in Automatic Mode: When the boom is completely elevated along the edge of the backward stability region and the telescope in function is activated, lift down will automatically function until the boom is away from the edge of the backward stability region.*

Boom Control System in Manual Mode: The boom will stop when the end of the envelope is reached and the operator must activate lift and/or telescope in the proper direction to bring the boom back into the envelope.

Controlled Angle

The control system automatically maintains a constant elevated boom angle when swinging the turntable. If the boom angle is at 30 degrees and swing only is activated the control system shall add lift to maintain the relative boom angle at 30 degrees.

Swing Speed Proportioning

The Boom Control System sensors sense the distance the platform is extended from the turntable, allowing higher swing speeds with the boom retracted and gradually slower swing speeds as the boom is extended.

Stability

Machine stability is based on two (2) conditions which are called FORWARD and BACKWARD stability. The machine's position of least FORWARD stability is shown in Figure 4-1., and its position of least BACKWARD stability is shown in Figure 4-2.

⚠ WARNING

TO AVOID FORWARD OR BACKWARD TIPPING, DO NOT OVERLOAD MACHINE OR OPERATE THE MACHINE ON AN OUT-OF-LEVEL SURFACE.

4.3 CAPACITY SELECT

The Boom Control System allows the operator to select operation in a 500 lb. (227 kg for ANSI markets and 230 kg for CE and Australia markets) capacity restriction envelope or a 1000 lb. (454 kg for ANSI markets and 450 kg for CE and Australia markets) capacity restriction envelope. The operator selects the desired capacity restriction by positioning the Capacity Select switch on the platform console. The Capacity Indicator shows the capacity selected, and both capacity lights will flash and an alarm sound if the platform is out of the selected capacity range.

NOTE: *Operation in the 1000 lb. (454 kg for ANSI markets and 450 kg for CE and Australia markets) envelope requires the jib to be fully retracted.*

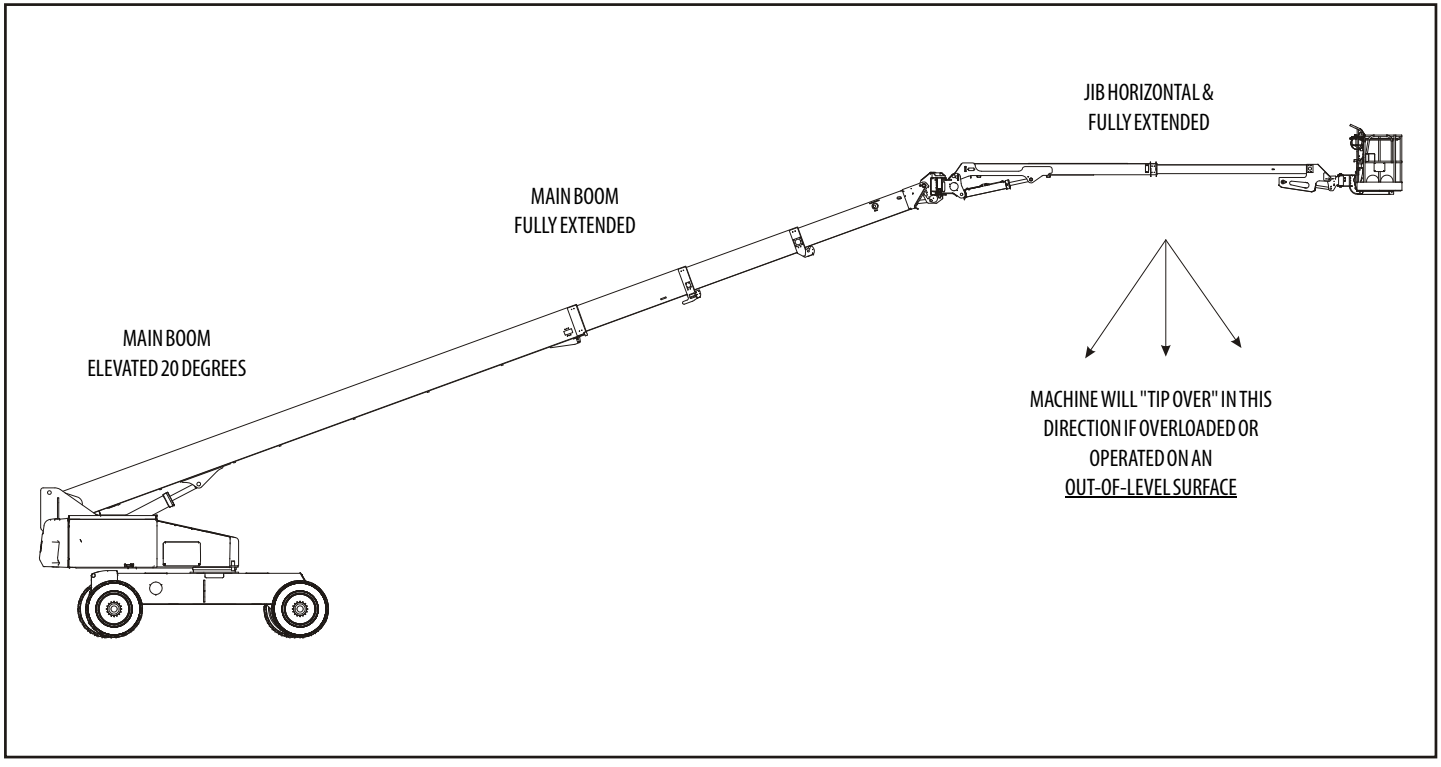

Figure 4-1. Position of Least Forward Stability

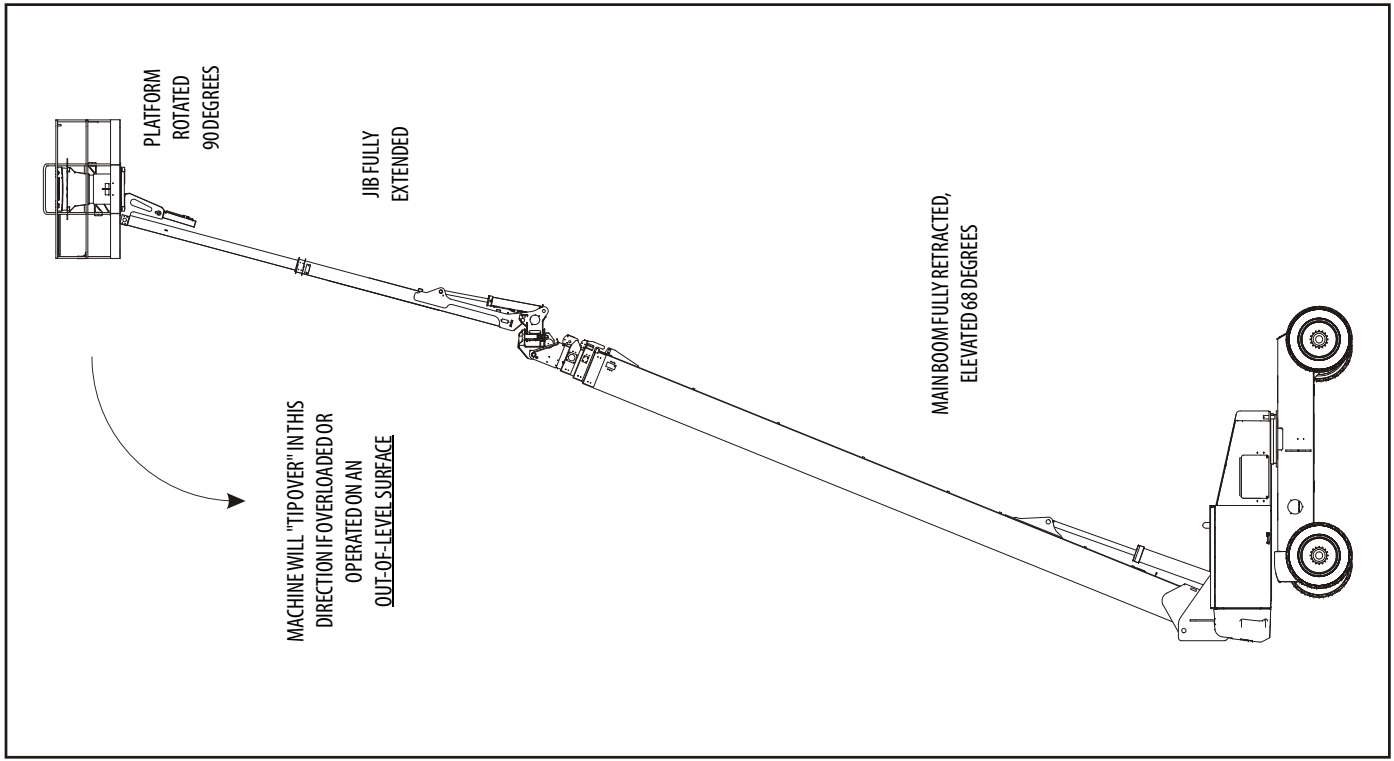

Figure 4-2. Position of Least Backward Stability

4.4 ENGINE OPERATION

NOTE: *When operating a machine at high altitudes, a decrease in machine performance may occur due to a decrease in air density.*

NOTE: *When operating a machine at high ambient temperatures, a decrease in machine performance and an increase in engine coolant temperature may occur.*

NOTE: *Contact JLG Customer Service for operation under abnormal conditions.*

NOTE: *Initial starting should always be performed from the Ground Control station.*

Starting Procedure

⚠ CAUTION

IF ENGINE FAILS TO START PROMPTLY, DO NOT CRANK FOR AN EXTENDED TIME. SHOULD ENGINE FAIL TO START AGAIN, ALLOW STARTER TO "COOL OFF" FOR 2-3 MINUTES. IF ENGINE FAILS AFTER SEVERAL ATTEMPTS, REFER TO ENGINE MAINTENANCE MANUAL.

NOTE: *After turning on ignition, operator must wait until glow plug indicator light goes out before cranking engine.*

1. Turn key of Platform/Ground Select switch to the Ground position.

2. Pull the Power/Emergency Stop switch out.

3. Push the Engine Start switch until engine starts.

⚠ CAUTION

ALLOW ENGINE TO WARM-UP FOR A FEW MINUTES AT LOW SPEED BEFORE APPLYING ANY LOAD.

4. After engine has had sufficient time to warm up, shut engine off.
5. Turn Platform/Ground Select switch to the Platform position.

6. From the Platform, pull the Power/Emergency Stop switch out.

7. Push the Engine Start switch until engine starts.

NOTE: *Footswitch must be in released (up) position before starter will operate. If starter operates with footswitch in the depressed position, DO NOT OPERATE MACHINE.*

Shutdown Procedure

⚠ CAUTION

IF AN ENGINE MALFUNCTION CAUSES AN UNSCHEDULED SHUTDOWN, DETERMINE THE CAUSE AND CORRECT IT BEFORE RESTARTING THE ENGINE.

1. Remove all load and allow engine to operate at low speed for 3-5 minutes; this allows further reduction of internal engine temperature.
2. Push Power/Emergency Stop switch in.

3. Turn key of Platform/Ground Select switch to the Off position.

Refer to Engine Manufacturer's manual for detailed information.

Air Shutoff Valve (ASOV) (If Equipped)

Air Shutoff Valve (ASOV) is an overspeed protection device mounted to the engine's air intake system. When the valve is actuated, it obstructs airflow intake and stops the engine. Weekly tests are recommended to ensure the valve remains in good working condition.

1. Start the engine, running at idle.
2. Open the red test switch guard, then activate toggle to test mode.

NOTE: *Test switch is located under hood to the left of the engine (look for test decal).*

3. At the ground control panel, select any function and activate until valve actuates at test RPM of 1500. Once valve actuates, engine will stop.
4. Turn ignition to OFF.
5. Visually inspect valve to ensure it appears in good condition.
6. Reset valve by rotating valve handle to the Open position.

NOTE: *The handle cannot be turned unless the machine is off. Ensure the ignition is moved to the OFF position.*

⚠ WARNING

DO NOT USE ASOV AS AN ALTERNATIVE TO SHUTTING DOWN MACHINE PROPERLY.

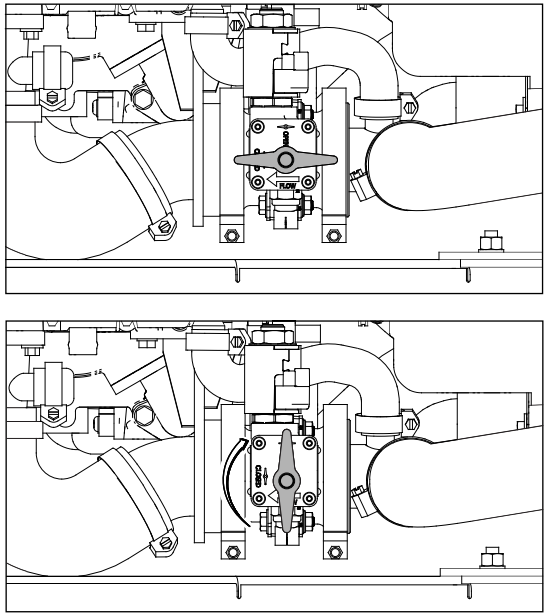

Figure 4-3. ASOV Reset (Open to Closed Position)

Fuel Reserve / Shut-Off System

NOTE: *Reference the Service and Maintenance Manual along with a qualified JLG Mechanic to verify your machine setup.*

The Fuel Shutoff System monitors the fuel in the tank and senses when the fuel level is getting low. The JLG Control System automatically shuts the engine down before the fuel tank is emptied unless the machine is set up for Engine Restart.

If fuel level reaches the Low Fuel range the ¼ tank indicator will flash once a second and there will be approximately 5 minutes of engine run time left. If the system is in this condition and automatically shuts down the engine, or the engine is manually shut down before the 5 minute run time is complete, the ¼ tank indicator will flash 10 times a second and the engine will react according to machine setup. Setup options are as follows:

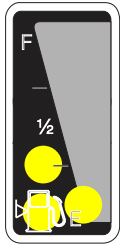

- Engine One Restart - When the engine shuts down, the operator will be permitted to cycle power and restart the engine once with approximately 2 minutes of run time. After the 2 minute run time is complete or if the engine is shut down by the operator prior to the completion of the 2 minute run time, it cannot be restarted until fuel is added to the tank.
- Engine Restart - When the engine shuts down, the operator will be permitted to cycle power and restart the engine for approximately 2 minutes of run time. After the 2 minutes of run time is complete, the operator may cycle power and restart the engine for an additional 2 minutes of run time. The operator can repeat this process until there is no more fuel available.

NOTICE

CONTACT A QUALIFIED JLG MECHANIC IF THE MACHINE NEEDS RESTARTED AFTER NO MORE FUEL IS AVAILABLE.

- Engine Stop - The engine will shut down. No restarts will be permitted until fuel is added to the tank.

4.5 TRAVELING (DRIVING)

See Figure 4-4., Grade and Side Slopes

NOTE: *When the main boom is raised approximately 6 degrees above horizontal, the high drive function will automatically be in low drive.*

⚠ WARNING

DO NOT DRIVE WITH BOOM ABOVE HORIZONTAL EXCEPT ON A SMOOTH, FIRM AND LEVEL SURFACE.

TO AVOID LOSS OF TRAVEL CONTROL OR "TIP OVER", DO NOT DRIVE MACHINE ON GRADES EXCEEDING THOSE SPECIFIED IN THE OPERATING SPECIFICATIONS SECTION OF THIS MANUAL.

DO NOT DRIVE ON SIDESLOPES WHICH EXCEED 5 DEGREES.

USE EXTREME CAUTION WHEN DRIVING IN REVERSE AND AT ALL TIMES WHEN THE PLATFORM IS ELEVATED.

BEFORE DRIVING, LOCATE THE BLACK/WHITE ORIENTATION ARROWS ON BOTH THE CHASSIS AND THE PLATFORM CONTROLS. MOVE THE DRIVE CONTROLS IN A DIRECTION MATCHING THE DIRECTIONAL ARROWS.

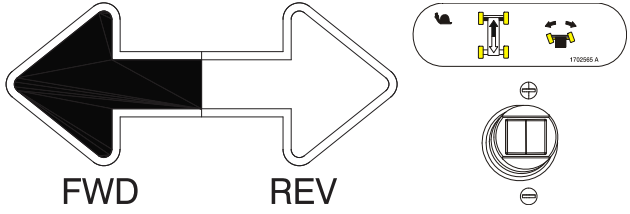

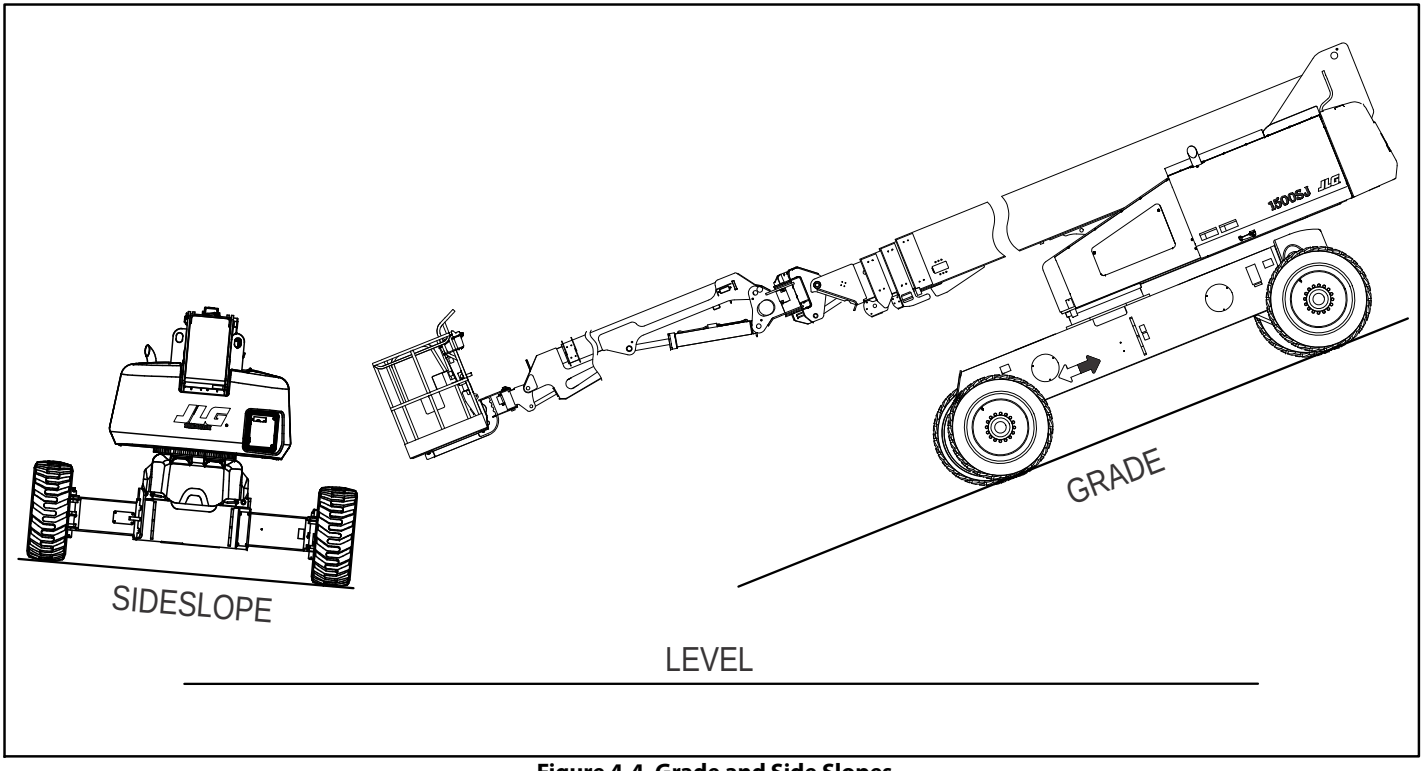

Figure 4-4. Grade and Side Slopes

Traveling Forward and Reverse

1. At Platform Controls, pull out Emergency Stop switch, start engine, and activate footswitch.

2. Position Drive controller to Forward or Reverse as desired.

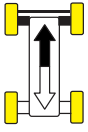

This machine is equipped with a Drive Orientation Indicator. The yellow light on the platform control console indicates that the boom is swung beyond the rear drive tires and the machine may Drive/Steer in the opposite direction from the movement of the controls. If the indicator is illuminated, operate the Drive function in the following manner:

1. Match the black and white direction arrows on both platform control panel and the chassis to determine the direction the machine will travel.

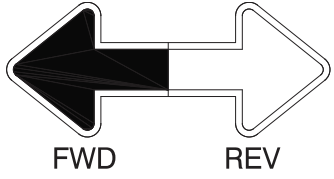

2. Push and release the Drive Orientation Override switch. Within 3 seconds, slowly move the Drive control toward the arrow matching the intended direction of machine travel. The indicator light will flash during the 3 second interval until the drive function is selected.

Traveling on a Grade

When traveling a grade, maximum braking and traction are obtained with the boom stowed, in position over the rear (drive) axle, and in line with the direction of travel. Drive the machine forward when climbing a grade, and in reverse when descending a grade. Do not exceed the machine's maximum rated gradability.

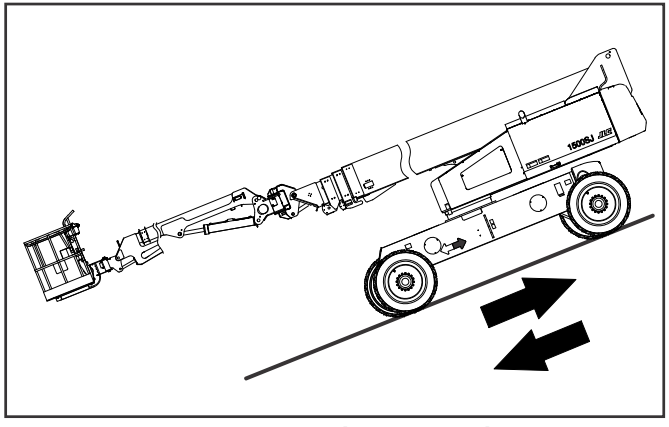

Figure 4-5. Traveling on a Grade

NOTICE

IF THE BOOM IS OVER THE FRONT (STEER) AXLE, DIRECTION OF STEER AND DRIVE MOVEMENT WILL BE OPOSITE FROM THE MOVEMENT OF THE CONTROLS.

4.6 STEERING

Position thumb switch on Drive/Steer controller to Right for steering right, or to Left for steering left.

4.7 EXTENDING THE AXLES

NOTE: *The boom must be oriented between the rear wheels to extend or retract the axles.*

The operator must be driving the machine (forward or reverse) in order to extend the axles.

Position the Axle Extend switch to extend the axles or to retract to retract the axles.

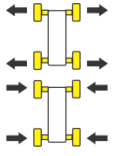

4.8 PLATFORM

Platform Level Adjustment

⚠ WARNING

ONLY USE THE PLATFORM LEVELING OVERRIDE FUNCTION FOR SLIGHT LEVELING OF THE PLATFORM. INCORRECT USE COULD CAUSE THE LOAD/OCCUPANTS TO SHIFT OR FALL. FAILURE TO DO SO COULD RESULT IN DEATH OR SERIOUS INJURY.

NOTE: *When the Boom Control Select Switch is in the Manual mode, Platform leveling only functions during Main Lift operation. When the Boom Control Select Switch is in the Automatic mode, Platform Leveling is active during all functions except during telescope operation. Also, when in the Manual mode, the Controlled Arc and Controlled Angle systems are not active.*

During normal operation of the machine, the platform will automatically maintain it's position. To manually Level Up or Down - Position the Platform/Level control switch Up or Down and hold until the desired platform position is obtained.

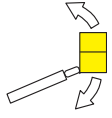

Platform Rotation

To rotate the platform to the left or right, use the Platform Rotate control switch to select the direction and hold until desired position is reached.

4.9 BOOM

⚠ WARNING

A RED TILT WARNING LIGHT IS LOCATED ON THE CONTROL CONSOLE WHICH LIGHTS WHEN THE CHASSIS IS ON AN EXCESSIVE SLOPE. DO NOT SWING OR RAISE BOOM ABOVE HORIZONTAL WHEN LIGHT IS LIT.

DO NOT DEPEND ON TILT ALARM AS A LEVEL INDICATOR FOR THE CHASSIS. TILT ALARM INDICATES CHASSIS IS ON AN EXCESSIVE SLOPE (4 DEGREE OR GREATER ON CE & AUSTRALIA SPEC MACHINES, 5 DEGREE OR GREATER ON ANSI, CSA, & JAPAN SPEC MACHINES). CHASSIS MUST BE LEVEL BEFORE SWINGING, OR RAISING BOOM ABOVE HORIZONTAL OR DRIVING WITH THE BOOM ELEVATED.

TO AVOID TIP OVER IF RED TILT WARNING LIGHT LIGHTS WHEN BOOM IS RAISED ABOVE HORIZONTAL, LOWER PLATFORM TO GROUND LEVEL. THEN REPOSITION MACHINE SO THAT CHASSIS IS LEVEL BEFORE RAISING BOOM.

⚠ WARNING

TRAVELING WITH BOOM BELOW HORIZONTAL IS PERMITTED ON GRADES AND SIDE SLOPES SPECIFIED IN THE OPERATING SPECIFICATIONS SECTION OF THIS MANUAL.

⚠ WARNING

TO AVOID SERIOUS INJURY, DO NOT OPERATE MACHINERY IF ANY CONTROL LEVER OR TOGGLE SWITCH CONTROLLING PLATFORM MOVEMENT DOES NOT RETURN TO THE 'OFF' OR NEUTRAL POSITION WHEN RELEASED.

⚠ CAUTION

TO AVOID A COLLISION AND INJURY IF PLATFORM DOES NOT STOP WHEN A CONTROL SWITCH OR LEVER IS RELEASED, REMOVE FOOT FROM FOOTSWITCH OR USE EMERGENCY STOP SWITCH TO STOP THE MACHINE.

Swinging the Boom

NOTE: *The axles must be fully extended to swing beyond the rear wheels (40 degrees).*

To swing boom, use Swing control to select Right or Left direction.

NOTICE

WHEN SWINGING THE BOOM MAKE SURE THERE IS AMPLE ROOM FOR THE BOOM TO CLEAR SURROUNDING WALLS, PARTITIONS AND EQUIPMENT.

Raising and Lowering the Boom

NOTE: *The lift function is not operable above 6 degrees above horizontal if the axles are not fully extended.*

To raise or lower the Boom, use Boom Lift control to select Up or Down movement.

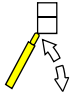

Telescoping the Boom

NOTE: *The telescope function is not operable beyond the transport position if the axles are not fully extended.*

To extend or retract the main boom, use the Telescope Control Switch to select In or Out movement.

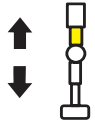

Telescoping the Jib

To extend or retract the jib, use the Jib Telescope Control Switch to select In or Out movement.

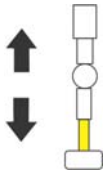

Stowing/Swinging the Jib

To swing the jib for stowage or machine usage, use the Jib Stow control to select Right or Left direction. The jib lock pin will also operate automatically while using the Jib Stow switch.

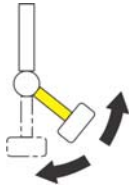

4.10 FUNCTION SPEED CONTROL

This control affects the speed of main boom telescope, jib telescope, and jib lift. Turning the knob all the way counterclockwise until it clicks puts drive, main lift, platform rotate, and swing into creep mode.

4.11 MACHINE SAFETY SYSTEM OVERRIDE (MSSO)(CE ONLY)

The Machine Safety System Override (MSSO) is used to override function controls for Emergency Platform Retrieval only. Refer to Section 6.5, Machine Safety System Override (MSSO)(CE Only) for operating procedures.

4.12 SKYGUARD OPERATION

SkyGuard provides enhanced control panel protection. When the SkyGuard sensor is activated, functions in use at the time of actuation will reverse or cutout. The SkyGuard Function Table provides more details on these functions.

During activation, the horn will sound and, if equipped with a SkyGuard beacon, the beacon will illuminate until sensor and footswitch are disengaged.

If the SkyGuard sensor remains activated after function reversal or cutout, depress and hold the SkyGuard Override Switch to allow normal functions until the sensor is disengaged.

Consult the following illustrations to determine which type of SkyGuard the machine has. Regardless of type, SkyGuard function according to the SkyGuard Function Table does not change.

SkyGuard

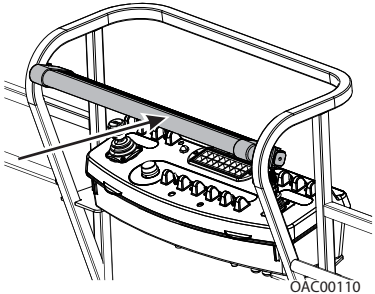

Approximately 50 lb (222 Nm) of force is applied to yellow bar.

SkyGuard - SkyLine

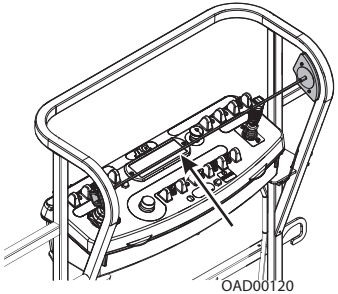

Cable is pressed, breaking the magnetic connection between the cable and right bracket.

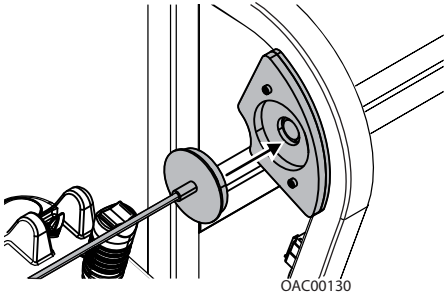

Reattach magnetic end of cable to bracket if it becomes disconnected.

SkyGuard - SkyEye

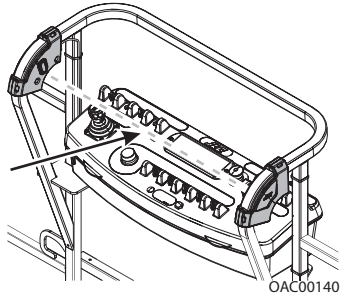

Operator passes through path of sensor beam.

SkyGuard Function Table

Drive Forward	Drive Reverse	Steer	Swing	Boom Lift Up	Boom Lift Down	Boom Tele Out	Boom Tele In	Jib Lift	Jib Swing	Jib Tele	Basket Level	Basket Rotate
R*/C**	R	C	R	R	R	R	C	C	C	C	C	C

R = Indicates Reversal is Activated

C = Indicates Cutout is Activated

***** DOS (Drive Orientation System) Enabled

****** DOS Not Enabled, machine is driving straight without steering, and any other hydraulic function is active

Note: If SkyGuard is enabled with the Soft Touch system, functions will cut out instead of reversing.

4.13 EMERGENCY TOWING

⚠ WARNING

RUNAWAY VEHICLE/MACHINE HAZARD. MACHINE HAS NO TOWING BRAKES. TOWING VEHICLE MUST BE ABLE TO CONTROL MACHINE AT ALL TIMES. ON-HIGHWAY TOWING NOT PERMITTED. FAILURE TO FOLLOW INSTRUCTIONS COULD CAUSE SERIOUS INJURY OR DEATH.

MAXIMUM TOWING SPEED 5 M.P.H. (8 K.M.H.)

MAXIMUM TOWING GRADE 25%.

⚠ CAUTION

DO NOT TOW MACHINE WITH ENGINE OPERATING OR DRIVE HUBS ENGAGED.

1. Retract, lower and position boom in travel position; lock turntable.
2. Disconnect drive hubs by inverting disconnect cap.

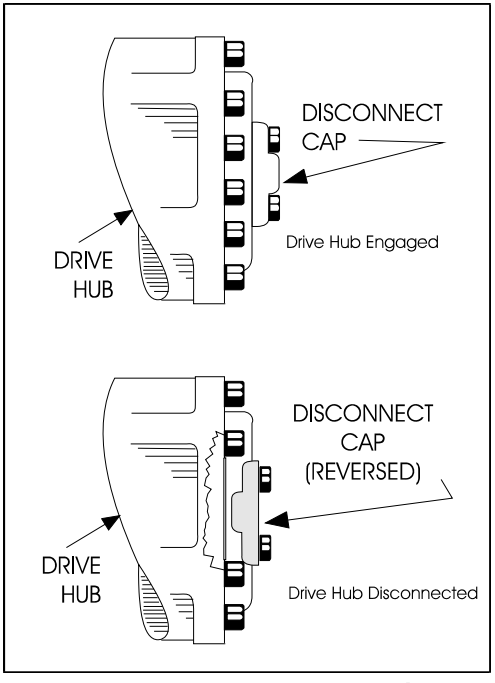

Figure 4-6. Drive Disconnect Hub

3. Reconnect the drive hubs by inverting the disconnect cap when towing is complete.

4.14 SHUT DOWN AND PARK

To shut down and park the machine, the procedures are as follows:

1. Drive machine to a reasonably well protected area.
2. Ensure boom is lowered over rear drive axle.
3. Push in the Emergency Stop at Platform Controls.
4. Push in the Emergency Stop at Ground Controls. Position Platform/Ground Select switch to the center Off position.
5. If necessary, cover Platform Controls to protect instruction placards, warning decals and operating controls from hostile environment.

4.15 LIFTING AND TIE DOWN

See Figure 4-7.

Lifting

1. Refer to the Serial Number Plate, refer to the Specifications section of this manual, or weigh the individual unit to find out the Gross Vehicle Weight.
2. Place the boom in the stowed position with the turntable locked.
3. Remove all loose items from the machine.
4. Attach lifting device and equipment only to the designated lifting points.
5. Properly adjust the rigging to prevent damage to the machine and so the machine remains level.

Tie Down

NOTICE

WHEN TRANSPORTING THE MACHINE, THE BOOM MUST BE FULLY LOWERED INTO THE BOOM REST.

1. Place the boom in the stowed position with the turntable locked.
2. Remove all loose items from the machine.
3. Secure the chassis and the platform using straps or chains of adequate strength and attached to the designated tie down points.

4.16 STOWING THE JIB FOR TRANSPORT

1. Place the boom in the stowed position with the axles retracted.
2. Hold the Jib Swing control switch to the right until the platform will no longer swing.

NOTE: *Automatic platform leveling is disabled when stowing the jib.*

3. Push and hold the platform rotate switch until the jib and platform are in the stowed position under the boom.

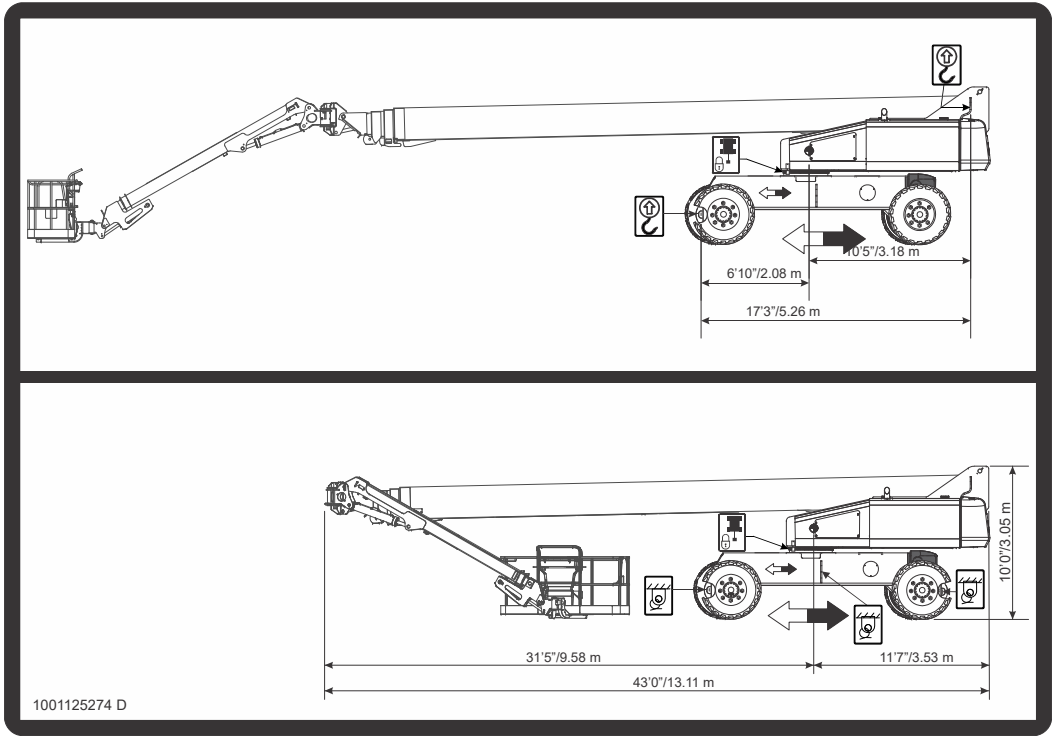

Figure 4-7. Lifting and Tie Down Chart

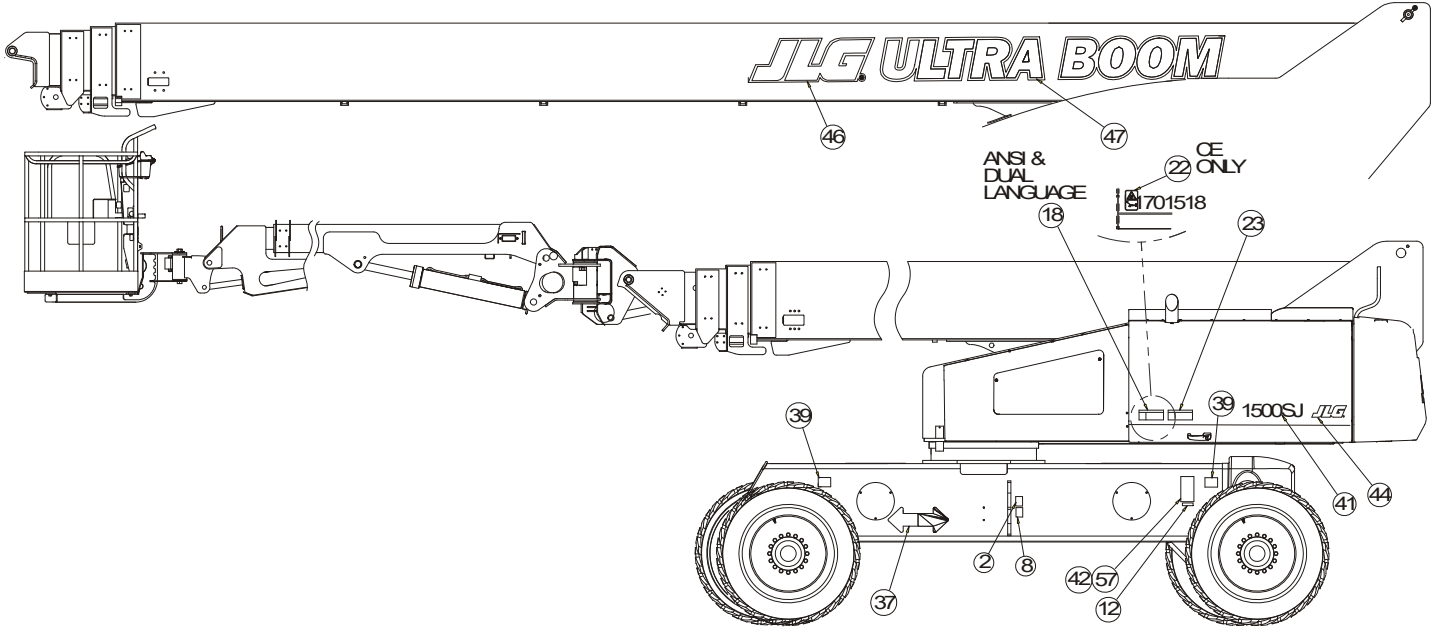

Figure 4-8. Decal Location Sheet 1 of 6

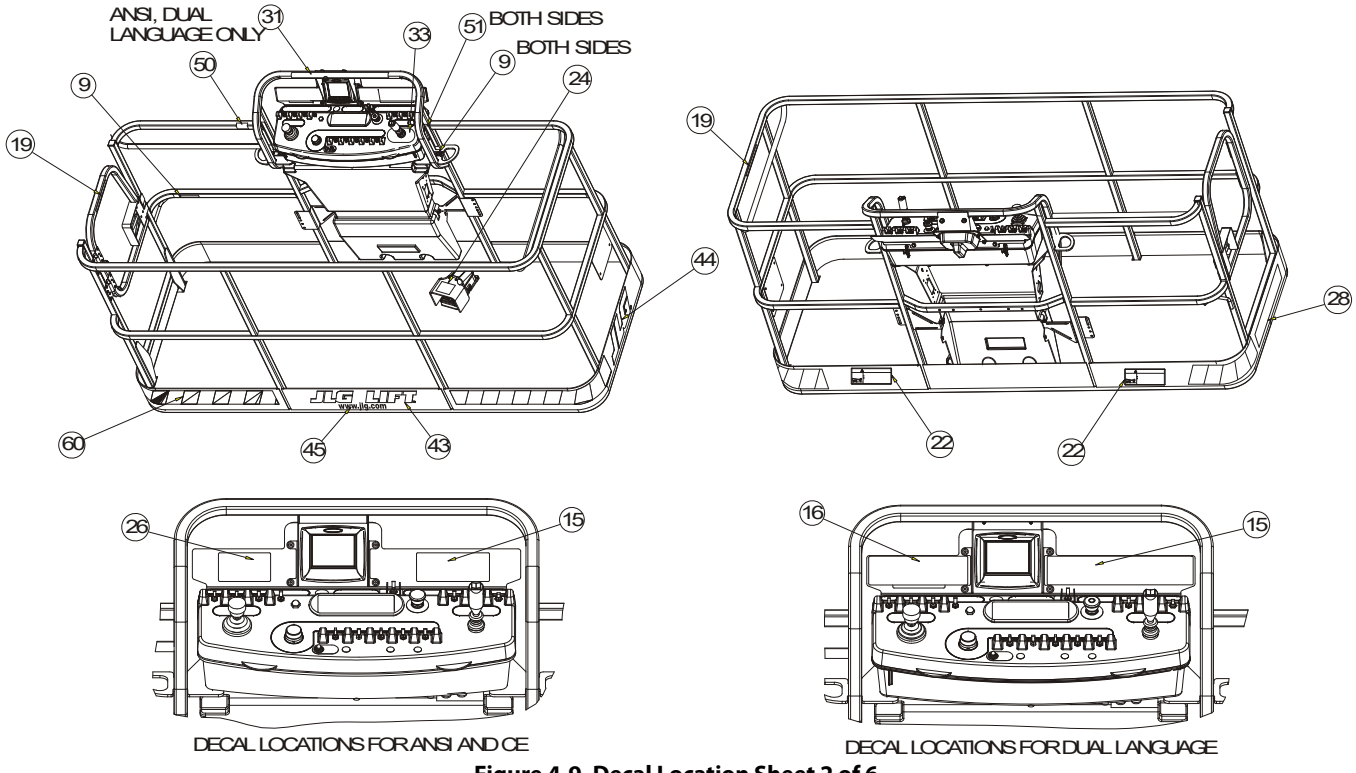

Figure 4-9. Decal Location Sheet 2 of 6

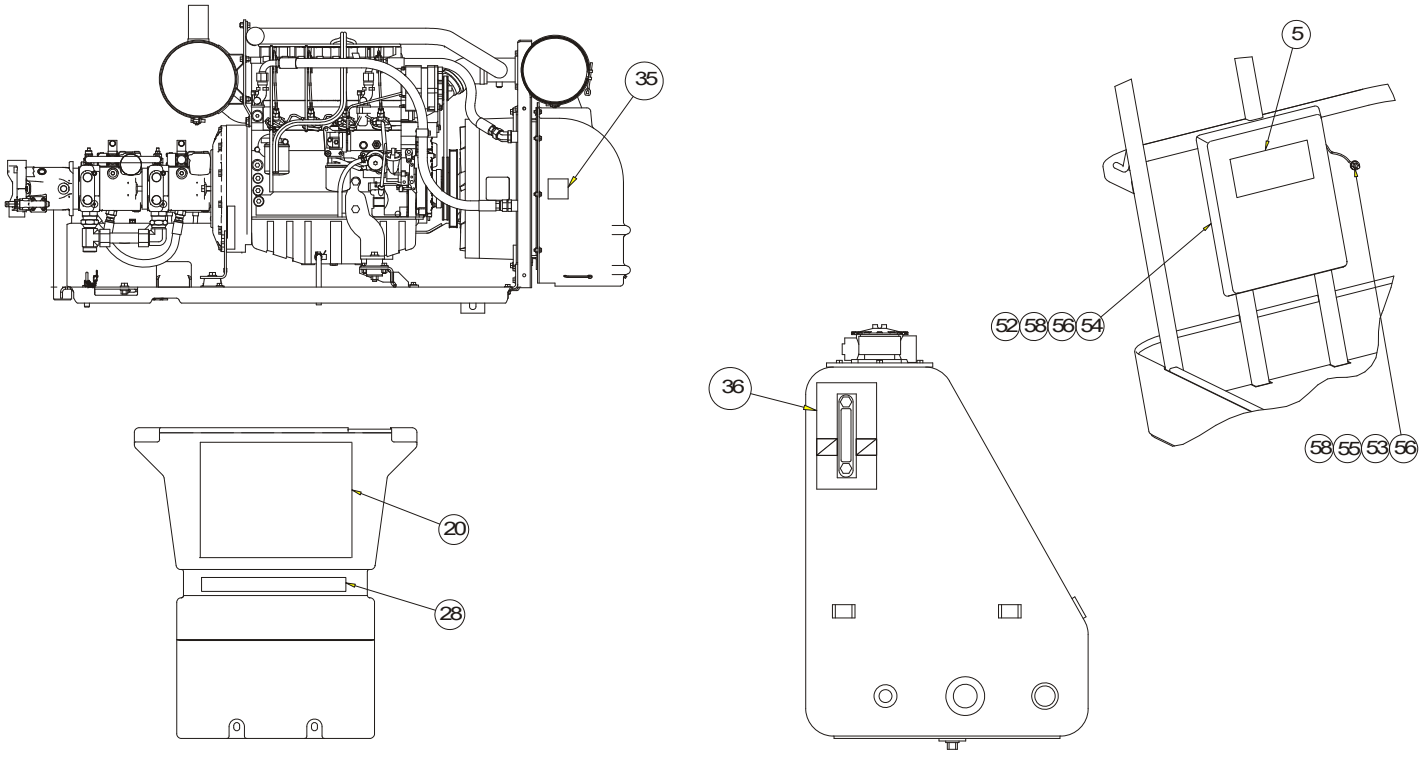

Figure 4-10. Decal Location Sheet 3 of 6

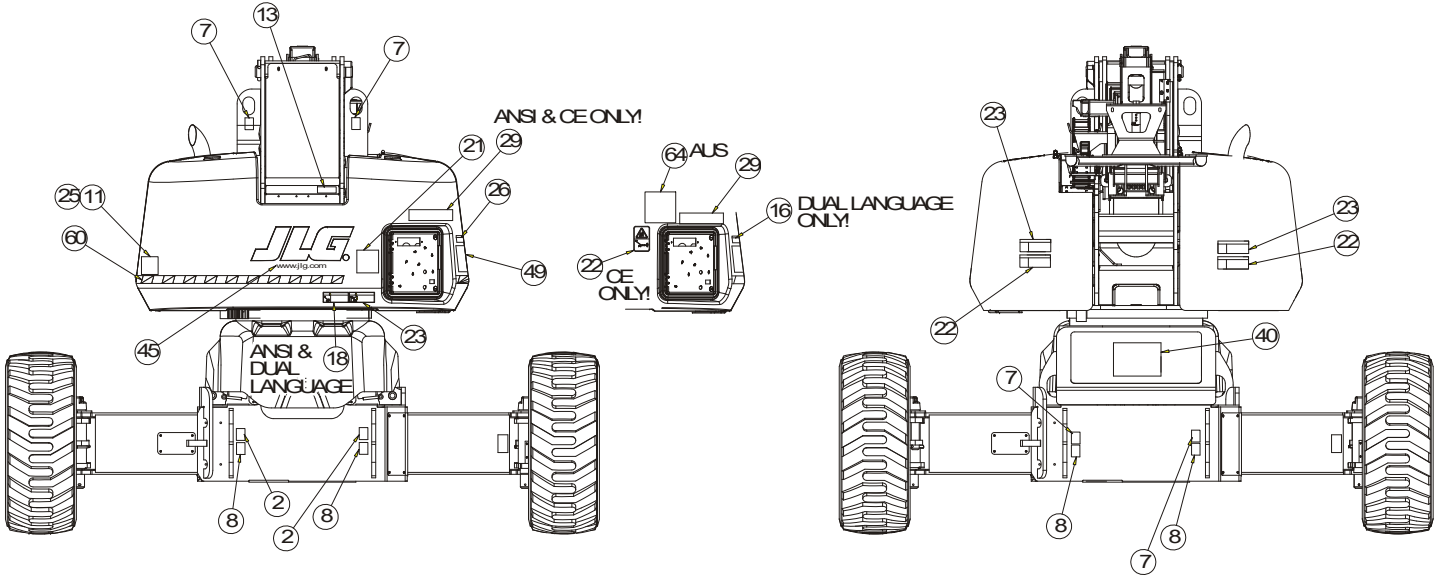

Figure 4-11. Decal Location Sheet 4 of 6

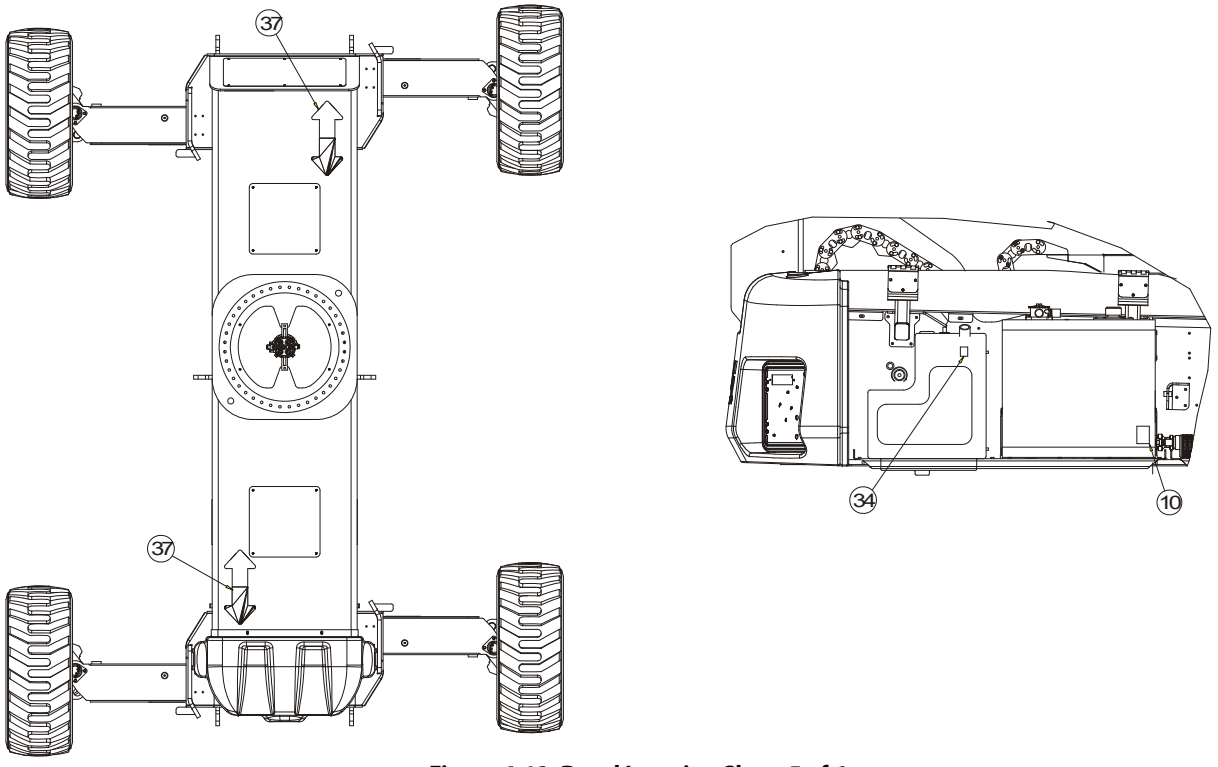

Figure 4-12. Decal Location Sheet 5 of 6

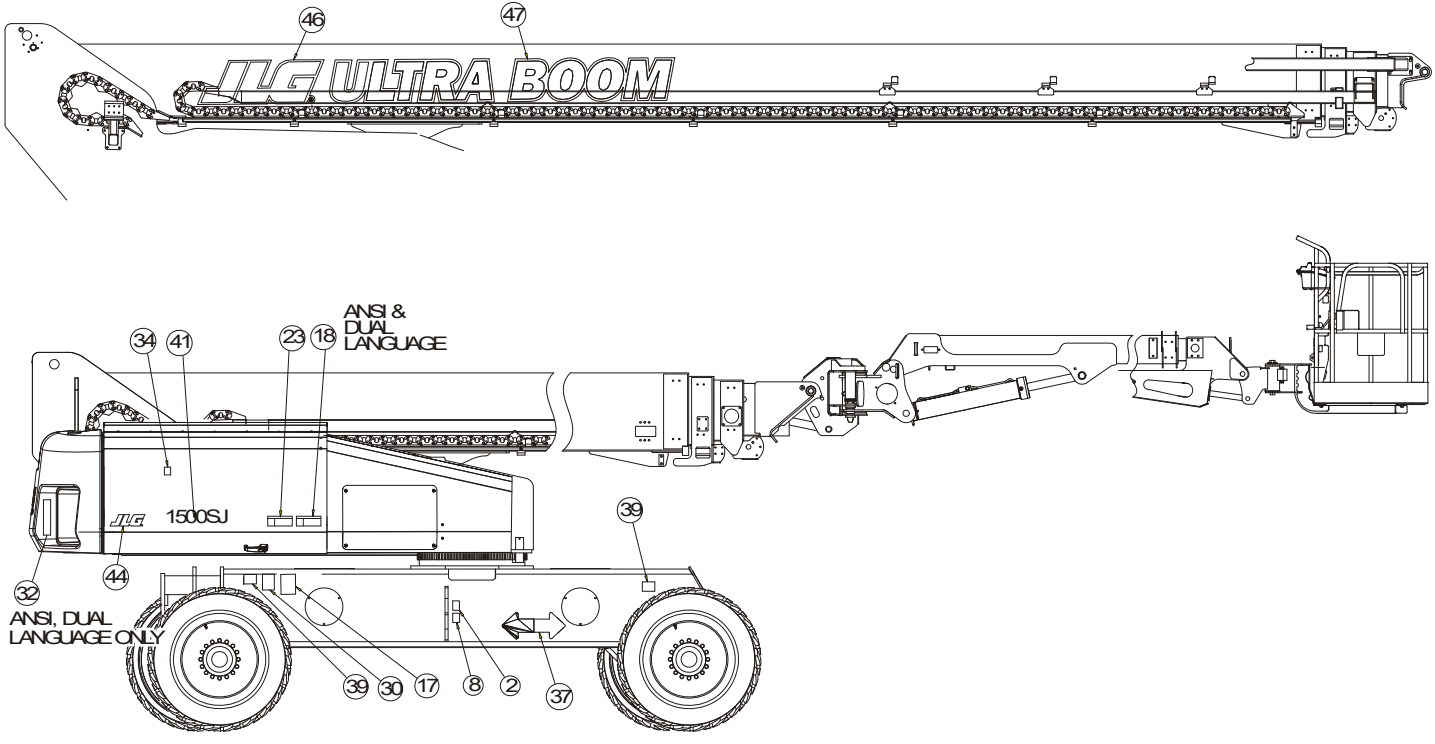

Figure 4-13. Decal Location Sheet 6 of 6

Table 4-1. Decal Legend

Item #	ANSI 1001125140-B	Korean 0274723-B	Chinese 0274724-B	Portuguese 0274725-B	English/ Spanish 0274726-B	French/English 0274727-B	CE 1001125143-B	Japan 0274729-B	Australia 1001125141-B
1	--	--	--	--	--	--	--	--	--
2	1701499	1701499	1701499	1701499	1701499	1701499	1701499	1701499	1701499
3	--	--	--	--	--	--	--	--	--
4	--	--	--	--	--	--	--	--	--
5	1701509	1701509	1701509	1701509	1701509	1701509	1701509	1701509	1701509
6	--	1701529	1701529	1701529	1701529	1701529	--	1701529	--
7	1703811	1703811	1703811	1703811	1703811	1703811	1703811	1703811	1703811
8	1703814	1703814	1703814	1703814	1703814	1703814	1703814	1703814	1703814
9	1704277	1704277	1704277	1704277	1704277	1704277	1704277	1704277	1704277
10	1704412	1704412	1704412	1704412	1704412	1704412	1704412	1704412	1704412
11	--	--	--	--	--	--	17055980	--	17055980
12	--	--	--	--	--	1705514	--	--	--
13	3251243	3251243	3251243	3251243	3251243	3251243	--	3251243	--
14	--	--	--	--	--	--	--	--	--
15	1705337	1705337	1001117034	1705904	1705337	1705341	--	1705338	--
16	--	--	1001117035	1705906	1705916	1705505	--	1705493	--

Table 4-1. Decal Legend

Item #	ANSI 1001125140-B	Korean 0274723-B	Chinese 0274724-B	Portuguese 0274725-B	English/ Spanish 0274726-B	French/English 0274727-B	CE 1001125143-B	Japan 0274729-B	Australia 1001125141-B
17	--	1702153	--	--	--	--	--	--	--
18	1703953	1703953	1703943	1705903	1703941	1703942	--	1703944	--
19	1702868	1702868	1001116846	1705967	1704001	1704000	--	--	--
20	1703797	1703797	1703925	1705895	1703923	1703924	1705921	1703926	1705921
21	1705336	1705336	1001116849	1705896	1705917	1705347	1705822	1705344	1705822
22	1703804	1703804	1703949	1705898	1703947	1703948	1701518	1703950	1701518
23	1703805	1703805	1001116851	1705897	1703935	1703936	1705961	1703938	1705961
24	3252347	--	1703982	1705902	1703983	1703984	1705828	1703980	1705828
25	--	3251813	3251813	3251813	--	3251813	--	--	--
26	1705492	1705492	1705508	1705907	1705915	1705506	--	1705494	--
27	1702631	1702631	1702631	1702631	1702631	1702631	--	1702631	1702631
28	1001125175	1001122370	1001122371	1001122372	1001122373	1001122374	1001125177	1001122375	1001125177
29	1001125176	1001122377	1001122378	1001122379	1001122380	1001122381	1001125178	1001122382	1001125178
30	1001131269	--	--	--	--	1700584	1700584	1700584	--
31	1001130584	1706751	1706751	1706751	1706751	1706751	--	1706751	--
32	1705868	1705868	1705868	1705868	1705868	1705868	--	1705868	--
33	1705351	1705351	1705430	1705905	1705910	1705429	--	1705426	--
34	1701505	1701505	1701505	1701505	1701505	1701505	1701505	1701505	1701505

Table 4-1. Decal Legend

Item #	ANSI 1001125140-B	Korean 0274723-B	Chinese 0274724-B	Portuguese 0274725-B	English/ Spanish 0274726-B	French/English 0274727-B	CE 1001125143-B	Japan 0274729-B	Australia 1001125141-B
35	1704972	1704972	1706060	1706059	1706063	1706064	1706098	1704972	1706098
36	1705511	1705511	1705511	1705511	1705511	1705511	1705511	1705511	1705511
37	1701501	1701501	1701501	1701501	1701501	1701501	1701501	1701501	1701501
38	--	--	--	--	--	--	--	--	--
39	--	--	--	--	--	--	--	--	--
40	--	--	--	--	--	--	--	--	--
41	--	--	--	--	--	--	--	--	--
42	--	--	--	--	--	--	--	--	--
43	--	--	--	--	--	--	--	--	--
44	--	--	--	--	--	--	--	--	--
45	--	--	--	--	--	--	--	--	--
46	--	--	--	--	--	--	--	--	--
47	--	--	--	--	--	--	--	--	--
48	--	--	--	--	--	--	--	--	--
49	--	--	--	--	--	--	--	--	--
50	--	--	--	--	--	--	--	--	--
51	--	--	--	--	--	--	--	--	--
52	--	--	--	--	--	--	--	--	--

Table 4-1. Decal Legend

Item #	ANSI 1001125140-B	Korean 0274723-B	Chinese 0274724-B	Portuguese 0274725-B	English/ Spanish 0274726-B	French/English 0274727-B	CE 1001125143-B	Japan 0274729-B	Australia 1001125141-B
53	--	--	--	--	--	--	--	--	--
54	--	--	--	--	--	--	--	--	--
55	--	--	--	--	--	--	--	--	--
56	--	--	--	--	--	--	--	--	--
57	--	--	--	--	--	--	--	--	--
58	--	--	--	--	--	--	--	--	--
59	--	--	--	--	--	--	--	--	--
60	--	--	--	--	--	--	--	--	--
61	--	--	--	--	--	--	--	--	--
62	--	--	--	--	--	--	--	--	--
63	--	--	--	--	--	--	--	--	--
64	--	--	--	--	--	--	--	--	1001112551

NOTES:

SECTION 5. LCD DISPLAY PANEL - GENERATION 1 & 2

5.1 IDENTIFICATION

The Operator can identify the Generation of the LCD Display Panel by the boot up splash screen that is displayed when the LCD screen is activated. Those screens are shown below.

Figure 5-1. Generation 1 Boot Up Splash Screen

Figure 5-2. Generation 2 Boot Up Splash Screen

5.2 LCD DISPLAY PANEL

Description

This machine utilizes an LCD display panel to assist the operator by supplying additional information during the operation of the machine. It is NOT a substitute for the Operation and Safety Manual, nor is it a replacement for thorough operational knowledge of the machine.

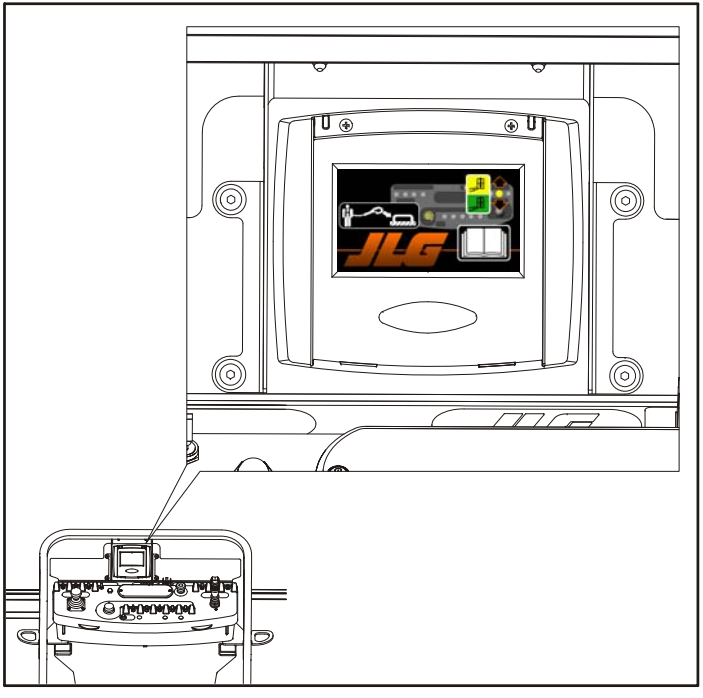

Figure 5-3. LCD Panel

5.3 GENERATION 1 LCD DISPLAY PANEL SCREENS

Boot Up Splash Screen

The Boot Up Splash Screen appears when the machine is first powered on. The screen contains several reminders for the operator prior to operation. There is a reminder for the operator to wear a full body harness with a lanyard attached to an authorized lanyard anchorage point, a reminder for the operator to read and understand the Operation and Safety Manual, and a reminder for the operator to select the desired capacity range of the machine. In addition, the display also uses a yellow circle and arrows to indicate the location of the Capacity Select switch and the available options for moving the switch.

Figure 5-4. Boot Up Splash Screen

Default Screen

The Default Screen appears after the boot screen if there are no faults present in the JLG Control System. The display shows an indication of fuel level, battery voltage, and engine rpm. In addition, a check mark in a green circle indicates no serviceable faults are present. The LCD software version is also displayed for 5 seconds after initial bootup.

NOTE: *In the example shown, the engine is not running.*

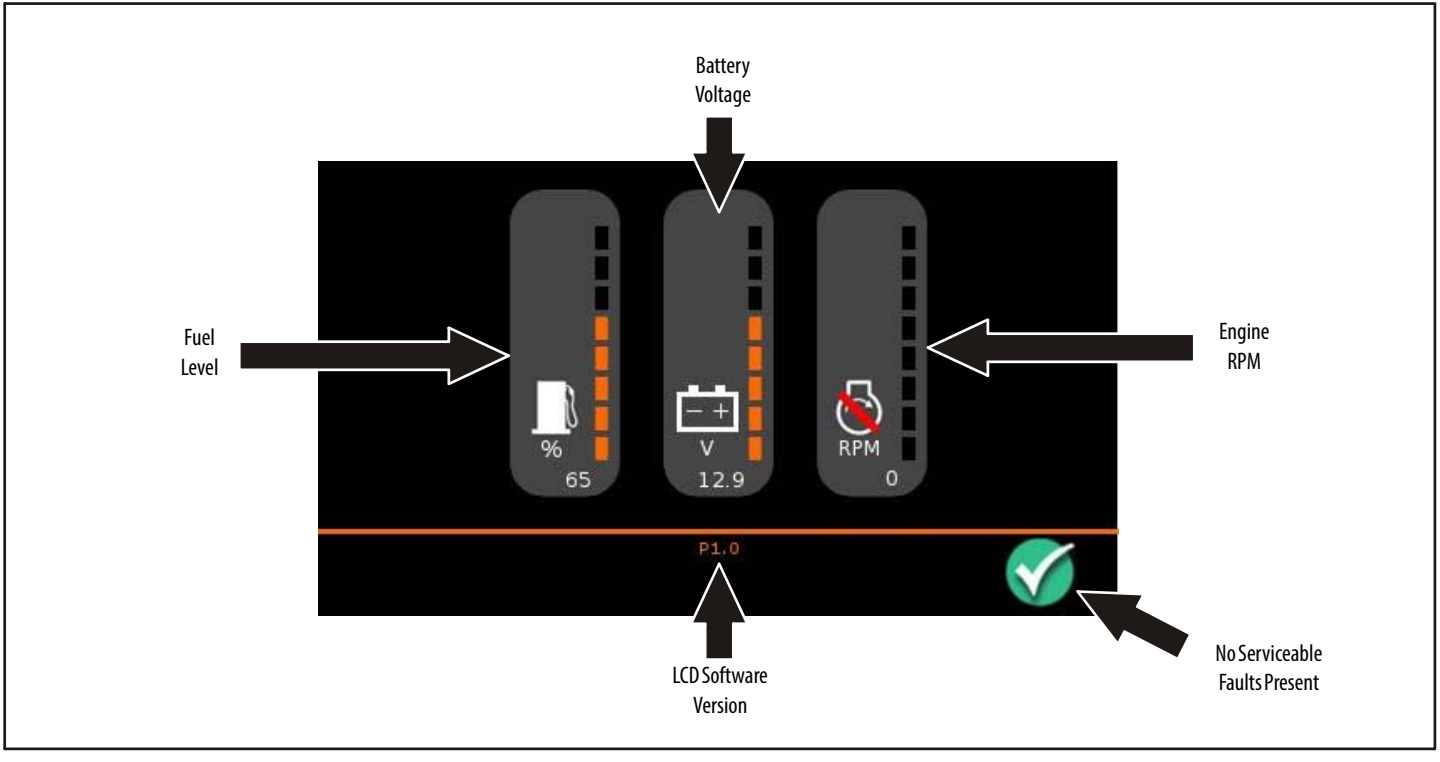

Figure 5-5. Default Screen

Conditional Icons

Several icons exist which may display below the line on the LCD panel on any screen if the operating condition they represent exists. These icons are Jib Unlocked, Jib Locked, Reduced Speed (turtle), Creep Speed (snail), Fault Code, Safety Alert Symbol, and No Serviceable Faults Present (check mark).

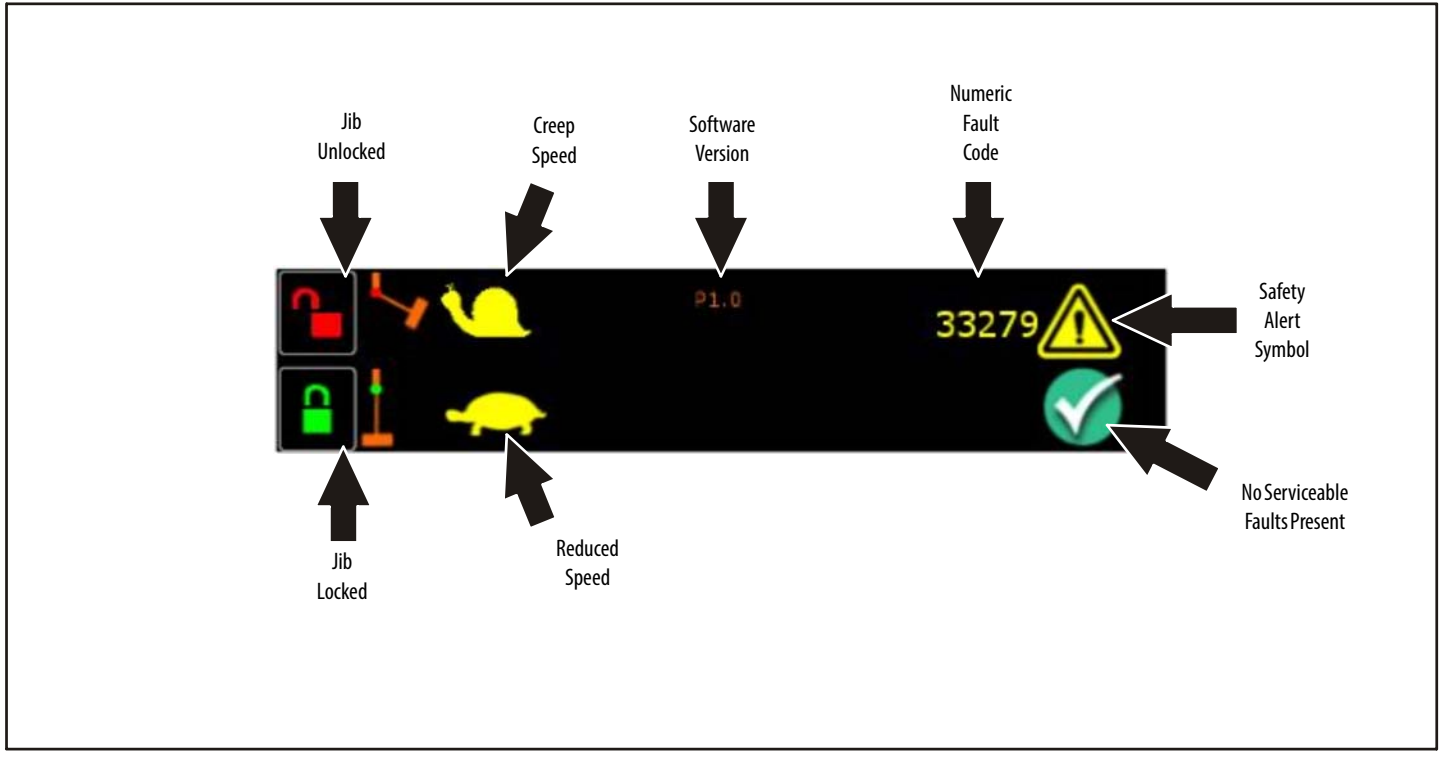

Figure 5-6. Conditional Icons

CAN Communication Error Screen

The CAN Communication Error Screen appears if the JLG Control System senses that the communication connection between the LCD display and the Ground Control Module has been lost. In the lower right hand corner, 66?? will display in the numeric fault code area with a safety alert symbol. The actual code cannot be displayed due to the communication error. Check the Service Manual for the specific fault code. This screen will remain until the condition is corrected.

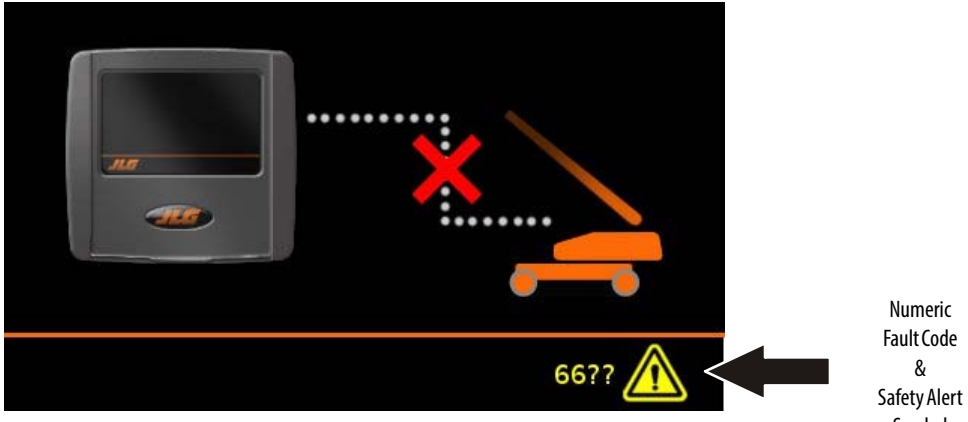

Figure 5-7. CAN Communication Error Screen

Serviceable Fault Indication Screen

The Serviceable Fault Indication Screen appears if the JLG Control System has sensed a fault that may require service attention by a technician. As on the default screen, the display shows an indication of the fuel level, battery voltage, and engine rpm. In the lower right hand corner, the numeric fault code with a safety alert symbol is displayed. Multiple faults will display in succession. Check the Service Manual for the specific fault code. In addition, the locked/unlocked status of the jib is displayed on the lower left corner of the screen.

NOTE: *The fault indication can be shown regardless of the information displayed above the orange line.*

NOTE: *In the example, fault 33279; Glowplug - Open Circuit is shown.*

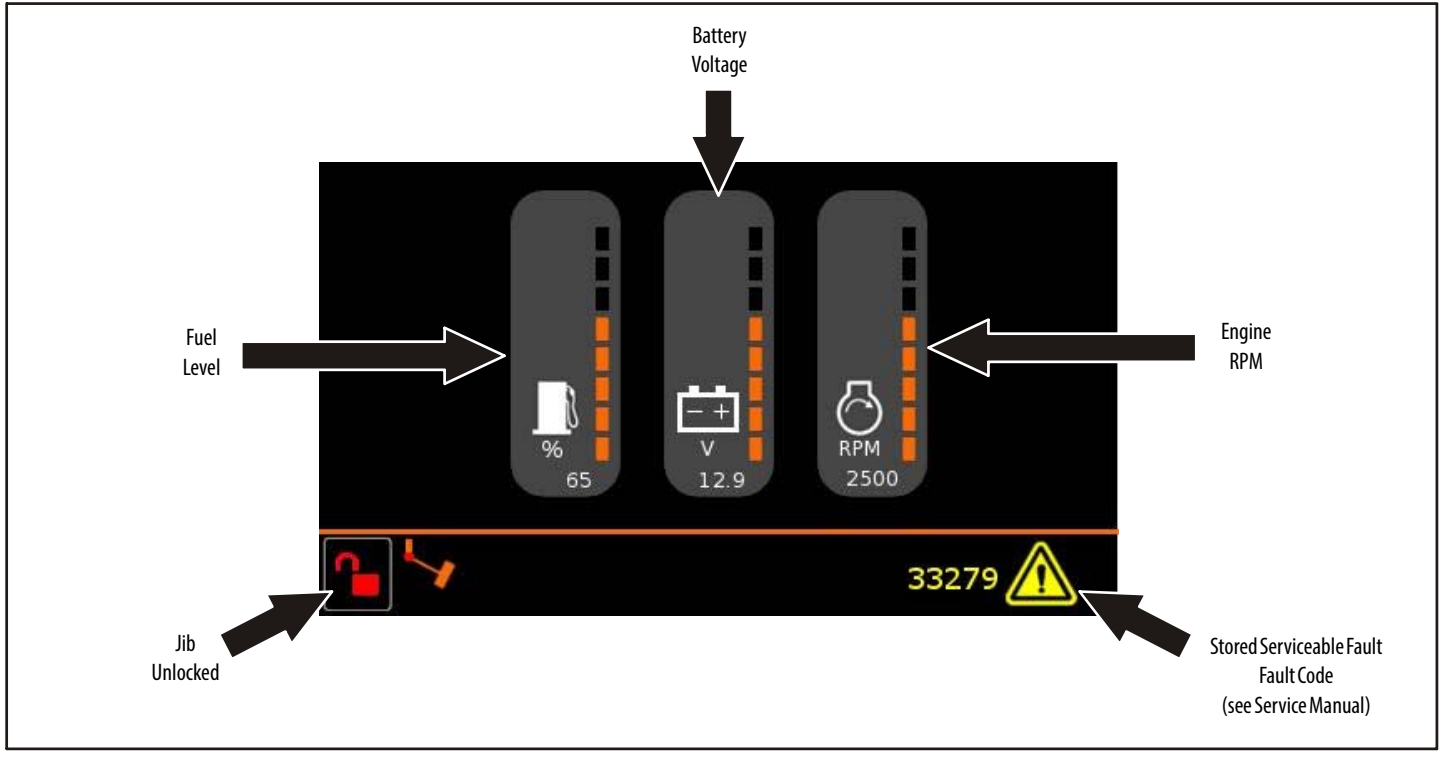

Figure 5-8. Serviceable Fault Screen

Keyswitch in Ground Control Mode Screen

The Keyswitch in Ground Control Mode Icon will be displayed as long as the key is in the ground control position. The icons below the orange line will reflect the status of the machine.

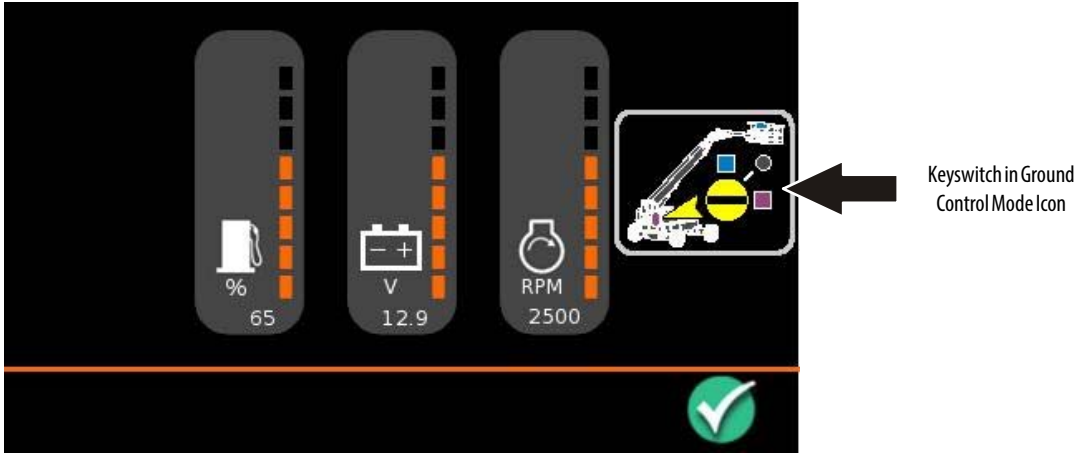

Figure 5-9. Keyswitch in Ground Control Mode Screen

Keyswitch in Ground Control Mode Screen with Operational Faults

The Keyswitch in Ground Control Mode Icon will be displayed as long as the key is in the ground control position. If any operational faults are active, the refer to Operation Manual icon will be shown. Additionally, the numeric fault code will be displayed above the icon. The icons below the orange line will reflect the status of the machine.

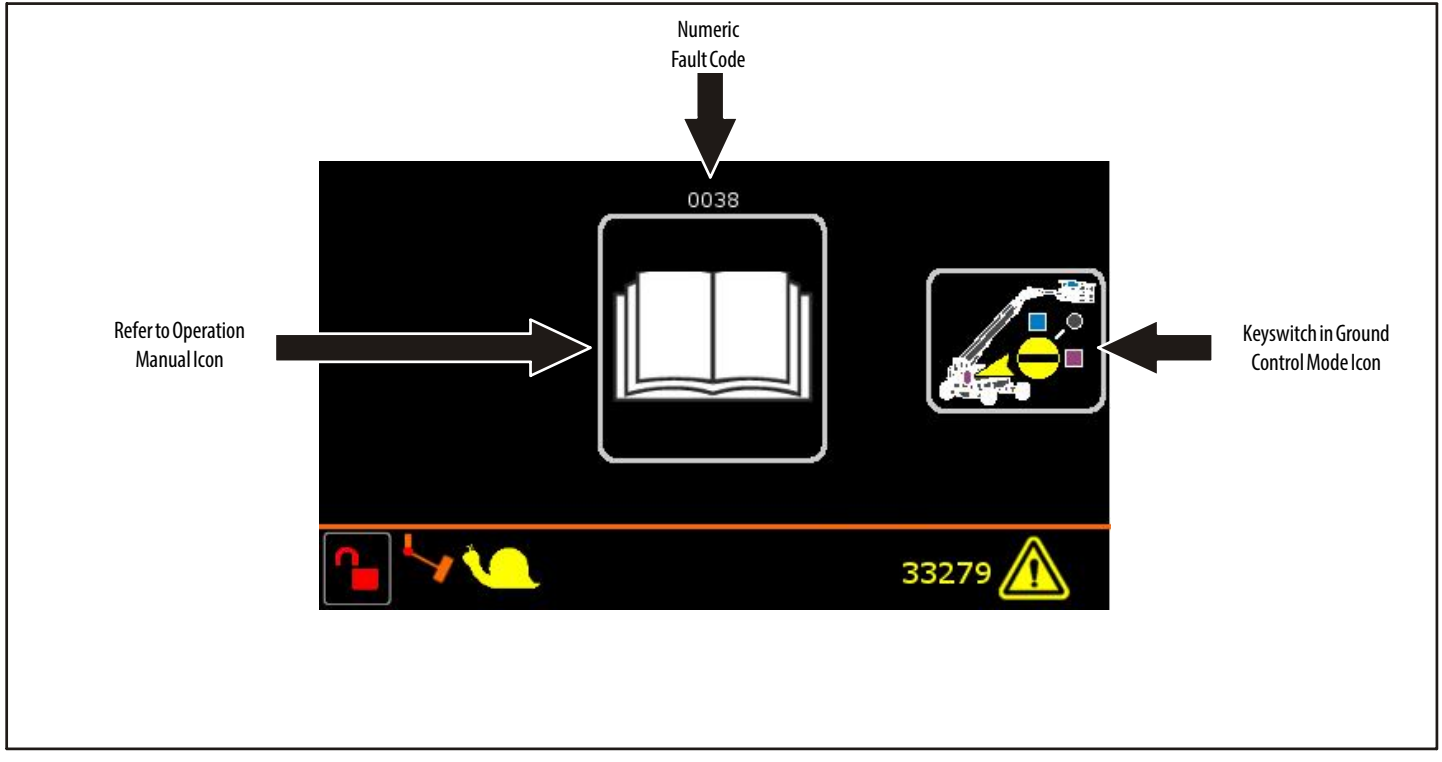

Figure 5-10. Keyswitch in Ground Control Mode with Operational Faults

Operational Fault - No Graphics Screen

The Operational Fault Screen appears if the JLG Control System has sensed a fault that is due to operator error or a condition when the operator can be provided with additional information (i.e. functions are being slowed). The display shows a manual icon as a reminder to check the Operation and Safety Manual for the fault code, which is displayed above the manual icon. In the lower right hand corner, a check mark in a green circle indicates no system faults are present. If a system fault is present, the numeric fault code with a caution symbol is displayed. Multiple faults will display in succession. Check the Operation and Safety Manual for the specific fault code.

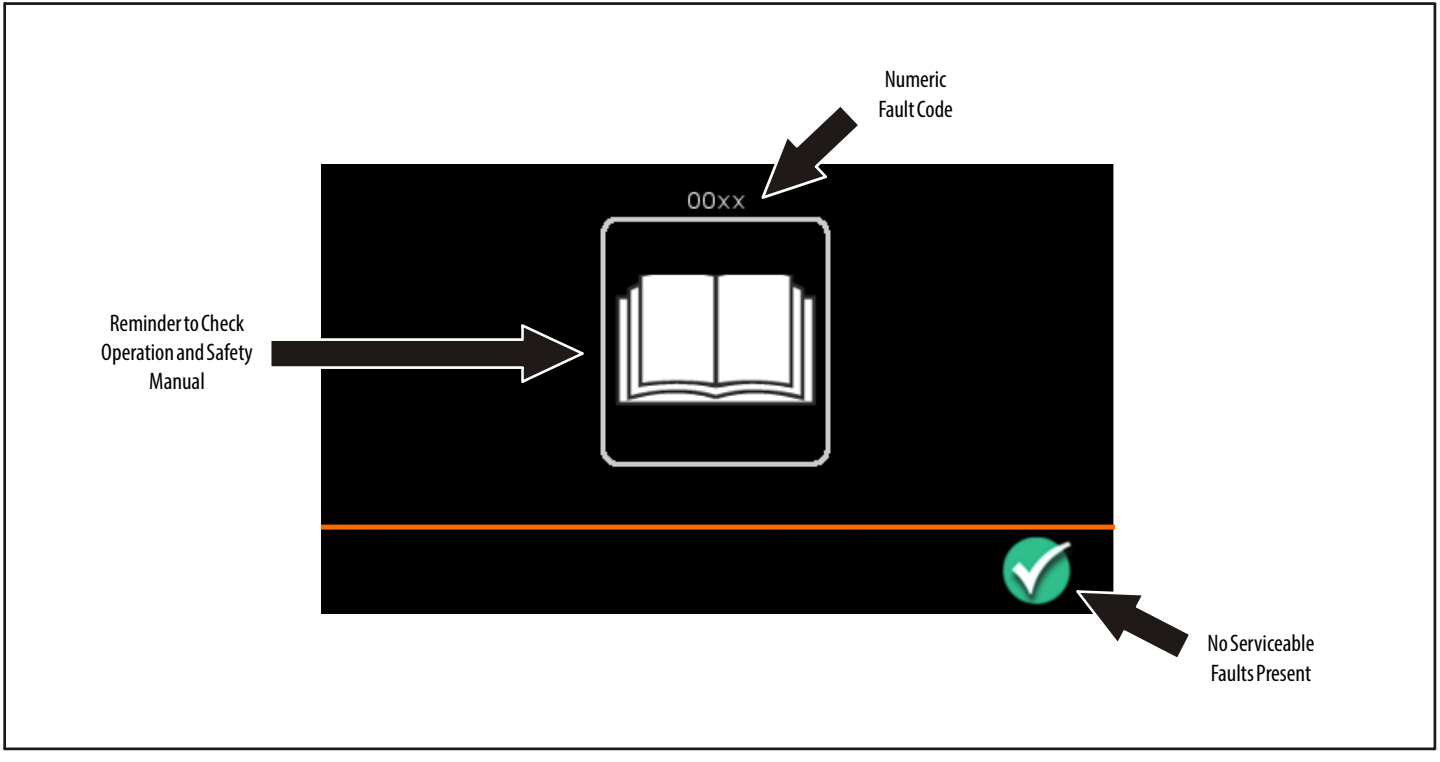

Figure 5-11. Operational Fault - No Graphics Screen

Operational Fault - With Graphics Screen

The Operational Fault Screen appears if the JLG Control System has sensed a fault that provides operational information. The display shows an icon that represents the fault and available control options along with the fault code, which is displayed above the fault icon (Fault 2224 - Footswitch Selected Before Start is used as an example). In the lower right hand corner, a check mark in a green circle indicates no serviceable faults are present. If a serviceable fault is present, the numeric fault code with a safety alert symbol is displayed. Multiple faults will display in succession. Check the Service Manual for the specific fault code. In addition, the locked/unlocked status of the jib is displayed. The locked jib icon is only displayed for 2 seconds after the pin is in the locked position.

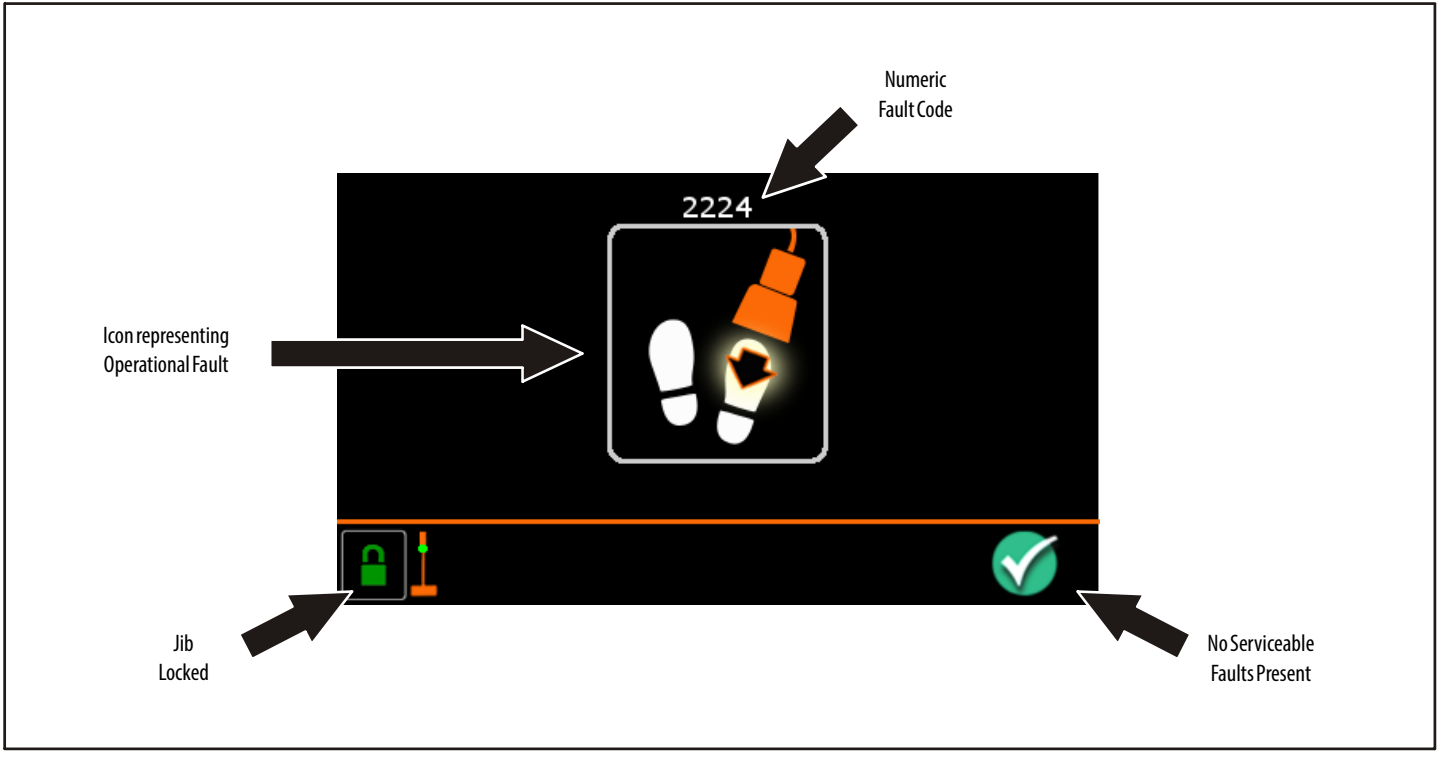

Figure 5-12. Operational Fault - With Graphics Screen

Operational Fault - Footswitch Open Screen

The Footswitch Open Screen appears if the JLG Control System has sensed a fault that is due to the operator having the footswitch open. In this condition, no functions are operable as shown by the red X's on the display screen. This screen will remain until the operator releases the restricted function. The operator can then operate the function by pushing the footswitch and operating the function again. In the lower right hand corner, a check mark in a green circle indicates no serviceable faults are present. If a serviceable fault is present, the numeric fault code with a safety alert symbol is displayed. Multiple faults will display in succession. Check the Service Manual for the specific fault code.

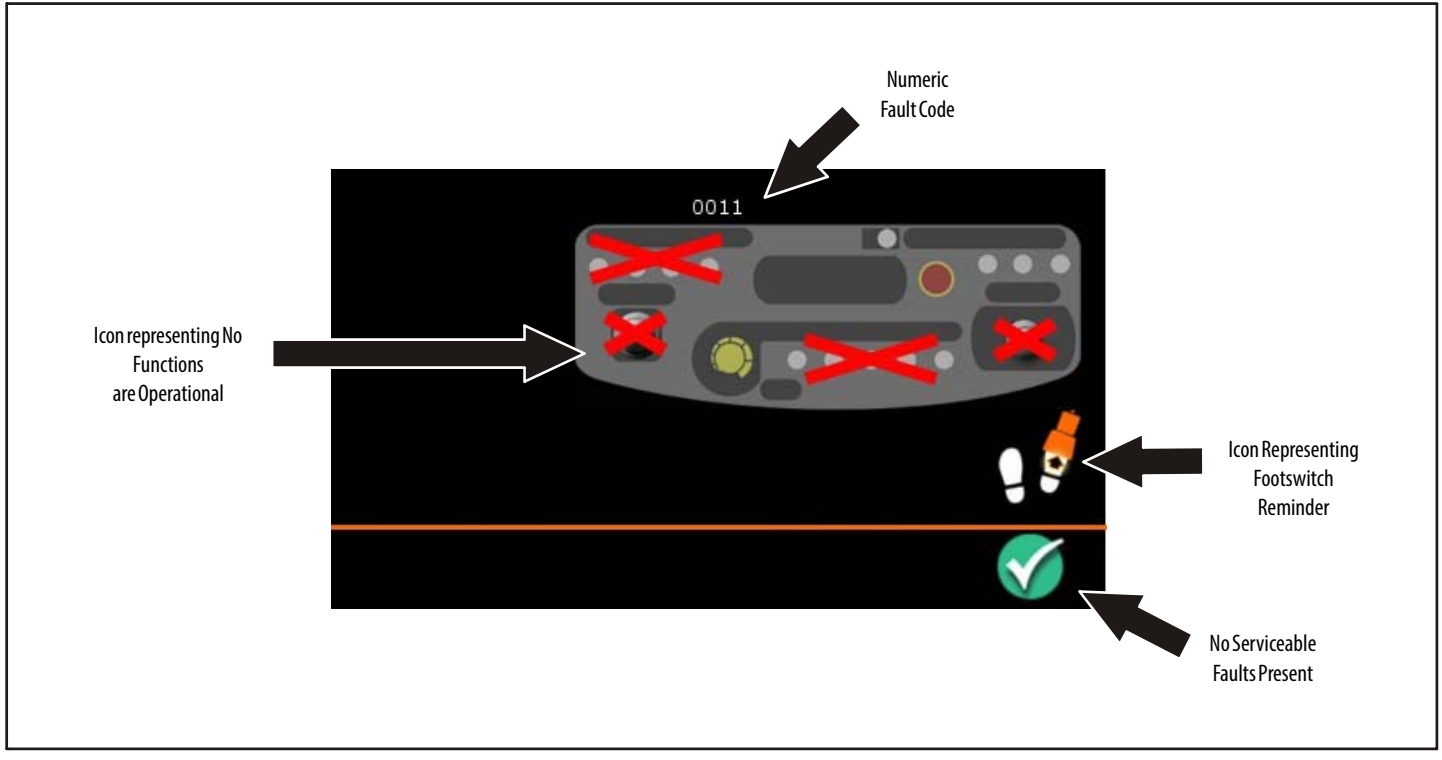

Figure 5-13. Operational Fault - Footswitch Open Screen

Out of Transport - Axles Retracted

The Out of Transport - Axles Retracted screen appears if the JLG Control System has sensed the boom has been moved out of the transport position with the axles retracted. The screen will remain until the operator operates one of the controls highlighted on the screen to correct the condition. In the lower right corner, a check mark in a green circle indicates there are no serviceable faults present. If a serviceable fault is present, the numeric fault code with a safety alert symbol is displayed. Multiple faults will display in succession. Check the Service Manual for the specific fault code.

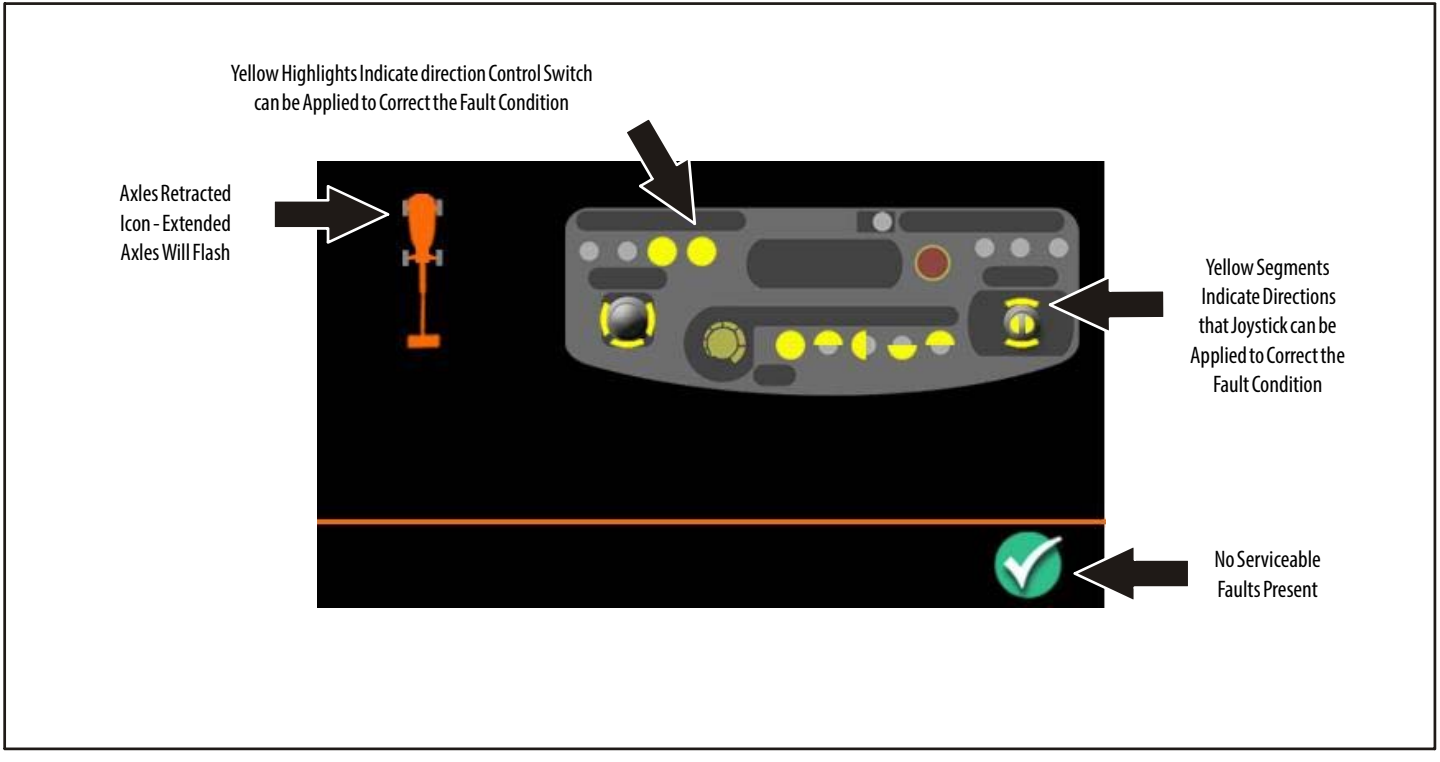

Figure 5-14. Out of Transport - Axles Retracted Screen

Operational Fault - Transport Swing Fault Screen

The Transport Swing Fault Screen appears when the 0038 - SWING ENVELOPE ENCROACHED - HYDRAULICS SUSPENDED operational fault is active, indicating that swing is restricted to +/- 40 degrees from center while the axles are retracted. This screen will remain until the operator operates one of the controls highlighted on the screen to correct the condition (the axles are extended or the turntable swings away from the limit). In the lower right hand corner, a check mark in a green circle indicates no serviceable faults are present. If a system fault is present, the numeric fault code with a safety alert symbol is displayed. Multiple faults will display in succession. Check the Service Manual for the specific fault code.

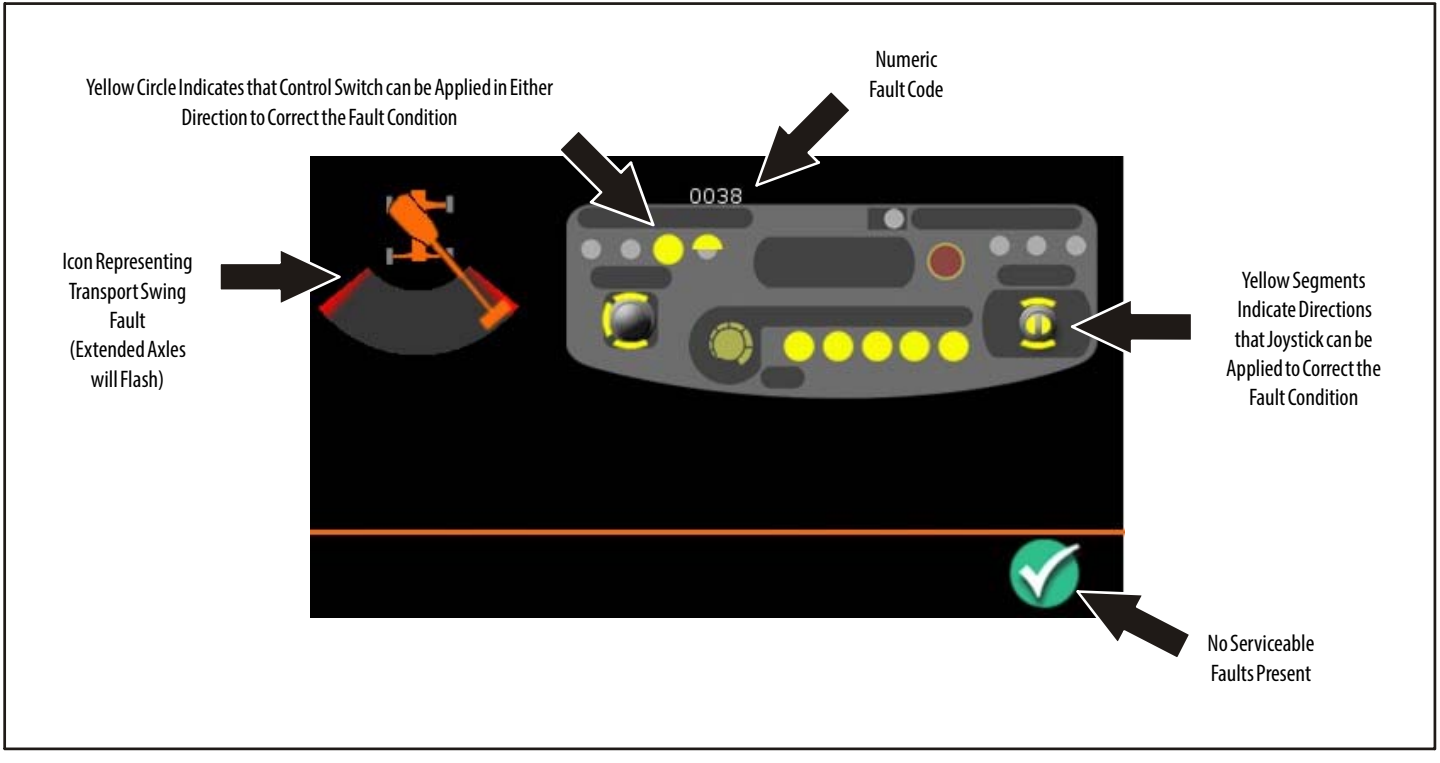

Figure 5-15. Transport Swing Fault Screen

Envelope Speed Reduction Screen

The Envelope Speed Reduction Screen appears if the JLG Control System has sensed that the boom is approaching the edge of the backward or forward operating envelope, which places all functions in proportionally reduced speed. The proportionally reduced speed function is indicated by the turtle icon in the lower left corner of the screen. In the lower right hand corner, a check mark in a green circle indicates no serviceable faults are present. If a serviceable fault is present, the numeric fault code with a safety alert symbol is displayed. Multiple faults will display in succession. Check the Service Manual for the specific fault code.

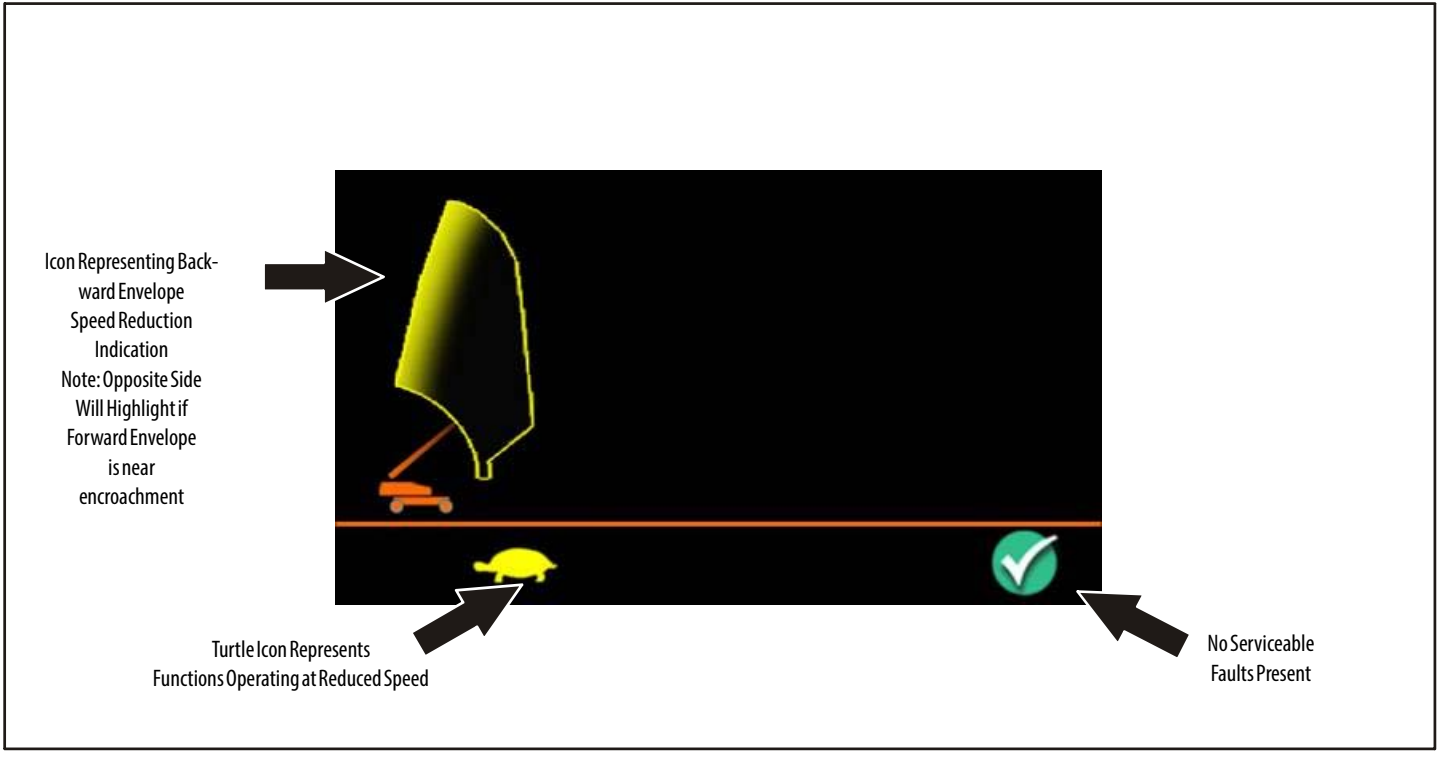

Figure 5-16. Backward Envelope Speed Reduction Fault Screen

Operational Fault - Envelope Violation Fault Screen

The Envelope Violation Fault Screen appears if the JLG Control System has sensed that the boom is encroaching the edge of the forward or backward operating envelope (hydraulics are suspended). This screen will remain until the operator operates one of the controls highlighted on the screen to correct the condition. In the lower right hand corner, a check mark in a green circle indicates no serviceable faults are present. If a serviceable fault is present, the numeric fault code with a safety alert symbol is displayed. Multiple faults will display in succession. Check the Service Manual for the specific fault code. This screen will show when the Boom Control System Light is illuminated.

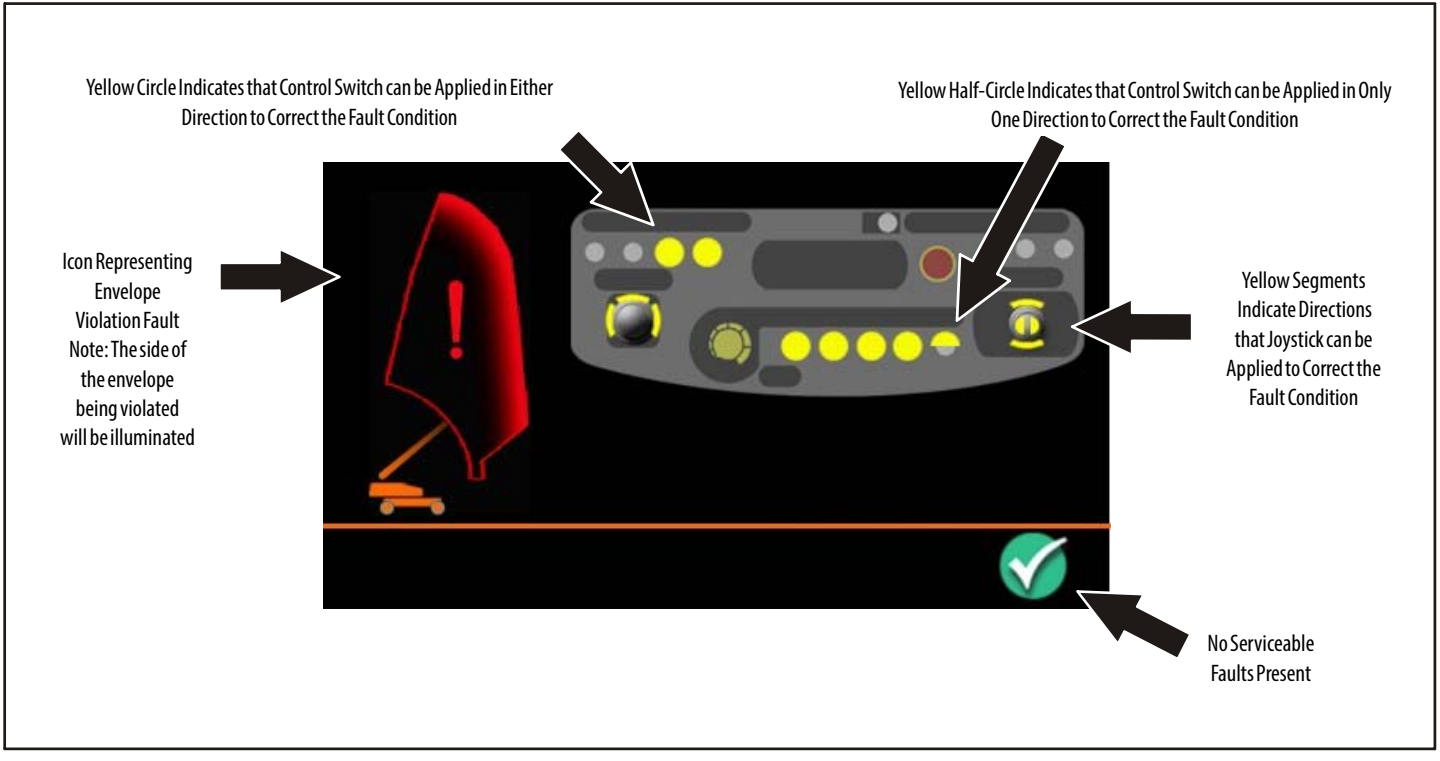

Figure 5-17. Forward Envelope Violation Fault Screen

Operational Fault - Over/Under Moment Fault (DTC 0017/ 0018)

The Over/Under Moment Fault Screen appears if the JLG Control System senses that the machine is in an over/under moment condition. This screen may also display without a Fault Code when the Boom Control System indicator light is lit. This screen will remain until the operator operates one of the controls highlighted on the screen to correct the condition. In the lower left corner of the screen, the Super Creep (snail) icon will be displayed to show that all functions will operate in Super Creep mode until the condition is corrected. In the lower right hand corner, a check mark in a green circle indicates no serviceable faults are present. If a serviceable fault is present, the numeric fault code with a safety alert symbol is displayed. Multiple faults will display in succession. Check the Service Manual for the specific fault code.

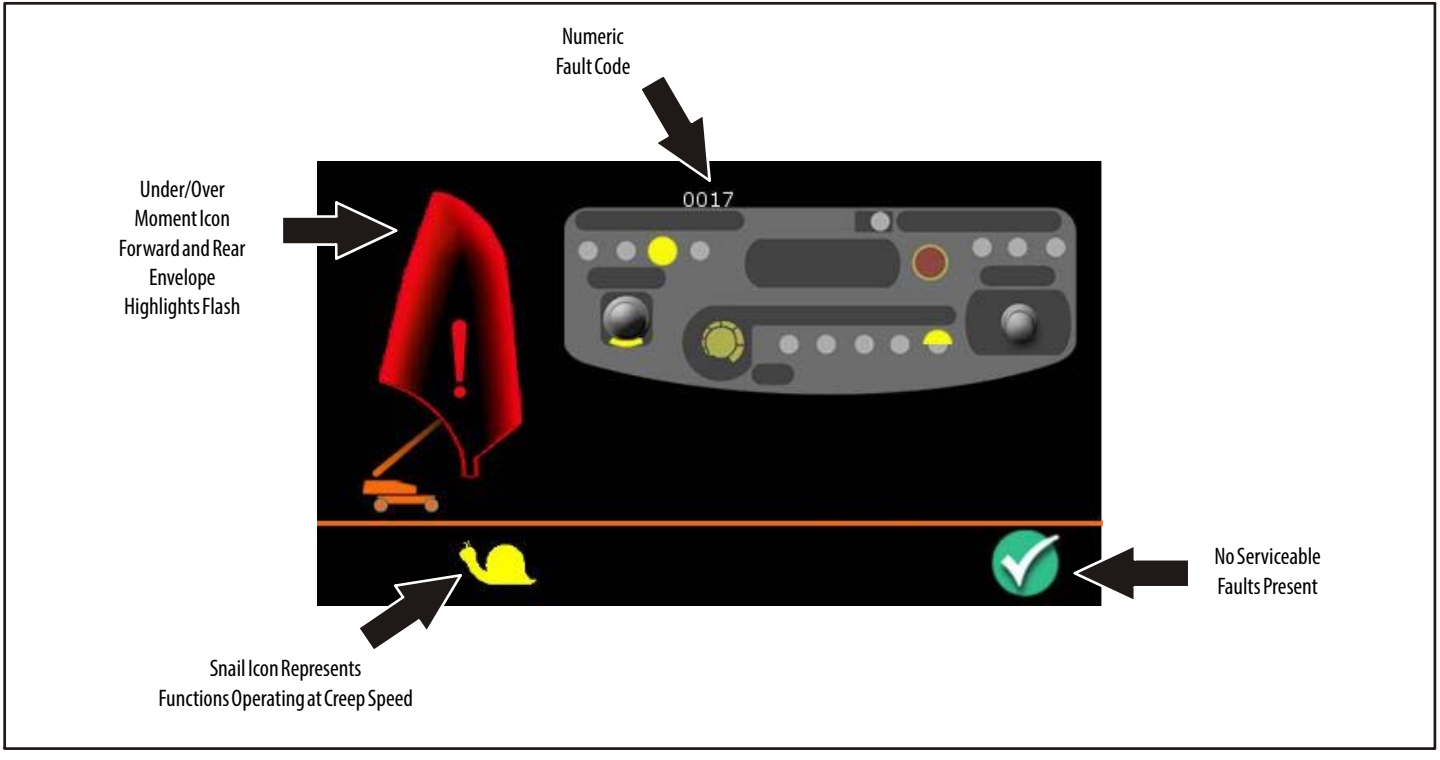

Figure 5-18. Over/Under Moment Fault Screen

5.4 GENERATION 2 LCD DISPLAY PANEL SCREENS

Boot up Splash Screen

When the machine is first powered on, the JLG boot up splash screen appears followed by three reminder screens. There is a reminder for the operator to wear a full body harness with a lanyard attached to an authorized lanyard anchorage point, a reminder for the operator to read and understand the Operation and Safety Manual, and a reminder for the operator to select the desired capacity range of the machine. Each reminder screen will show for 3 seconds.

Figure 5-19. Boot Up Splash Screen

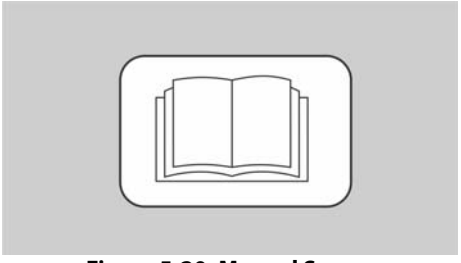

Figure 5-20. Manual Screen

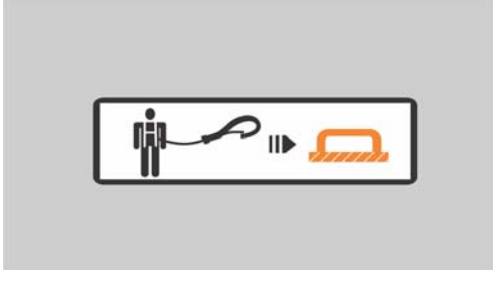

Figure 5-21. Lanyard Screen

Figure 5-22. Select Capacity Zone Screen

Machine Operating Screen

After the reminder screens, the Machine Operating Screen will appear. The Machine Operating Screen consists of different images and trays. Each tray provides different machine information.

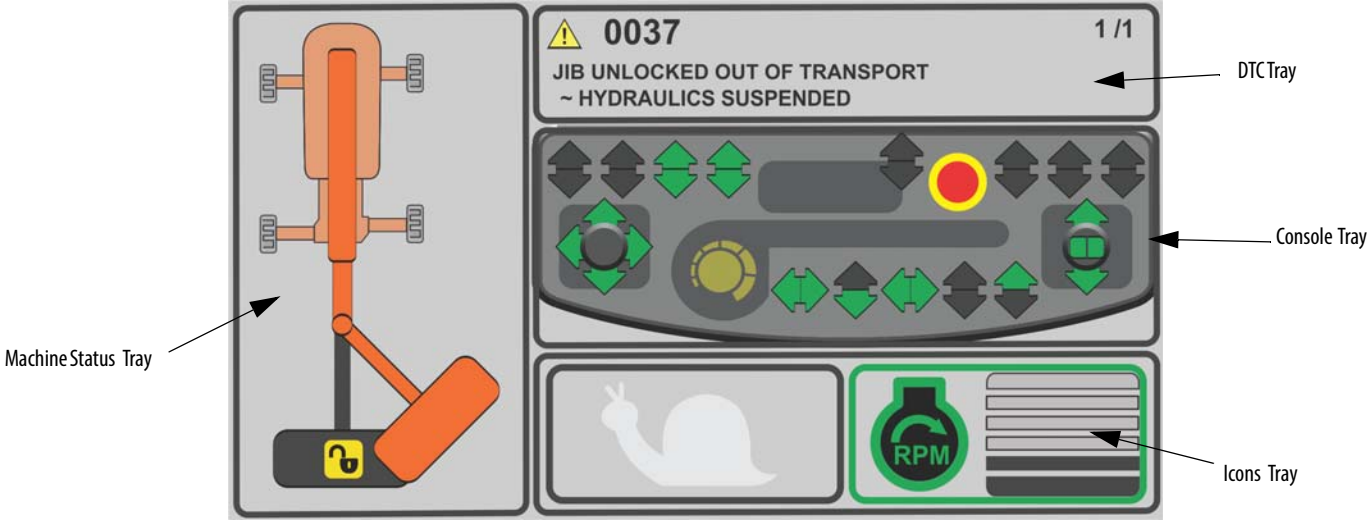

Figure 5-23. Machine Operating Screen

DIAGNOSTIC TROUBLE CODE (DTC) TRAY

This tray shows the total number of DTC's and the DTC Text. If there are multiple DTC's, the operator can scroll through the DTC List to the end. When the tray is empty, this means there are no active DTC's.

CONSOLE TRAY

This tray represents the platform console information.

When the machine is in operation, and the footswitch is pressed, the console will show available functions with a green arrow and unavailable functions with a gray arrow.

NOTE: *The green and gray console arrows shown in the examples in this section may be different depending upon machine setup and specific operating conditions.*

ICONS TRAY

The Icons Tray shows engine RPM plus Creep and Super Creep modes.

The RPM level is represented in bars.

MACHINE STATUS TRAY

The Machine Status Tray is used to display different images based on the machine status. These include:

- Key Switch Ground Mode
- CAN Bus Lost
- Take Foot Out
- Put Foot In
- BCS Lamp On
- Broken Cable
- System/Basket Level DTCs
- Platform Overload DTCs
- Weight Mode Error
- Swing Left DTC
- Swing Right DTC
- Jib Unlocked
- Jib Locked
- Chassis Status
- In Transport and Out of Transport
- Machine Tilted
- Envelope Status
- Unknown Machine Model

KeySwitch In Ground Mode:

If the keyswitch is set to ground mode, the display shows the Key Switch in Ground Mode Image.

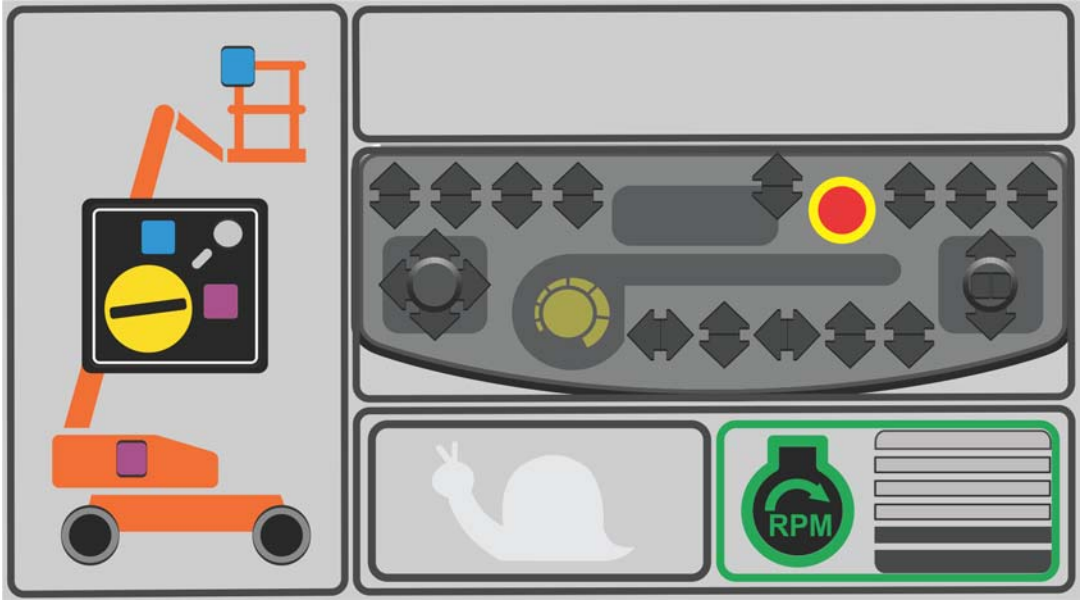

Figure 5-24. Keyswitch In Ground Mode Screen

Function Speed

If there is no function speed restriction, a gray snail is shown. If the machine is in Creep Mode, a green snail icon is shown. If the machine is in Super Creep Mode, the green snail icon will flash.

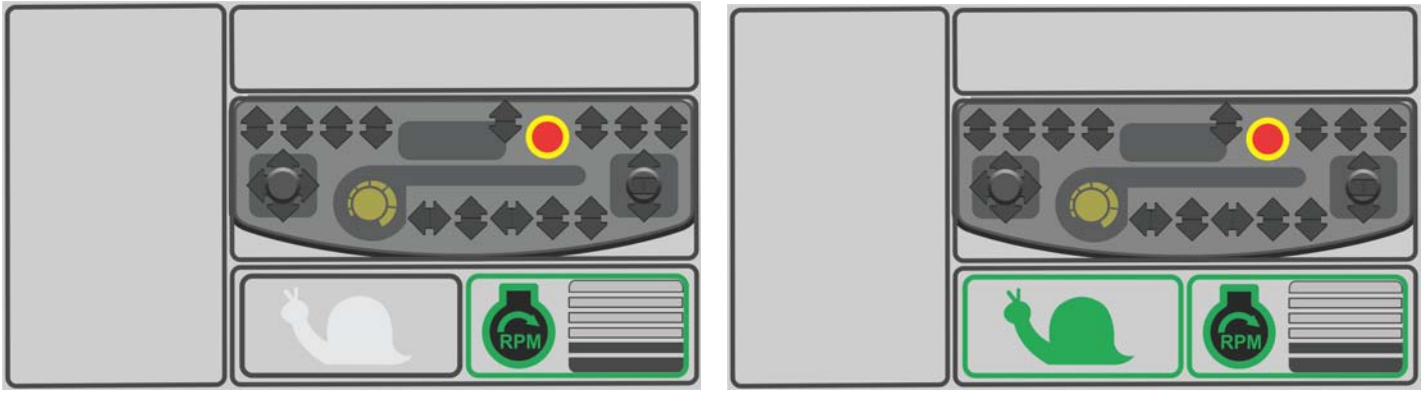

Figure 5-25. Function Speed Icons

CAN Bus Lost

When the control system senses a communication loss with any of the control modules (BLAM, Chassis, UGM, or Jib Control Module), the display will show a CAN Communication lost until the communications are reset.

NOTE: *There is no way to get the active DTCs so, the previously active DTCs will be scrolling along with the CAN Bus Communication lost DTC. This DTC needs to be cleared in order for the communications to reset.*

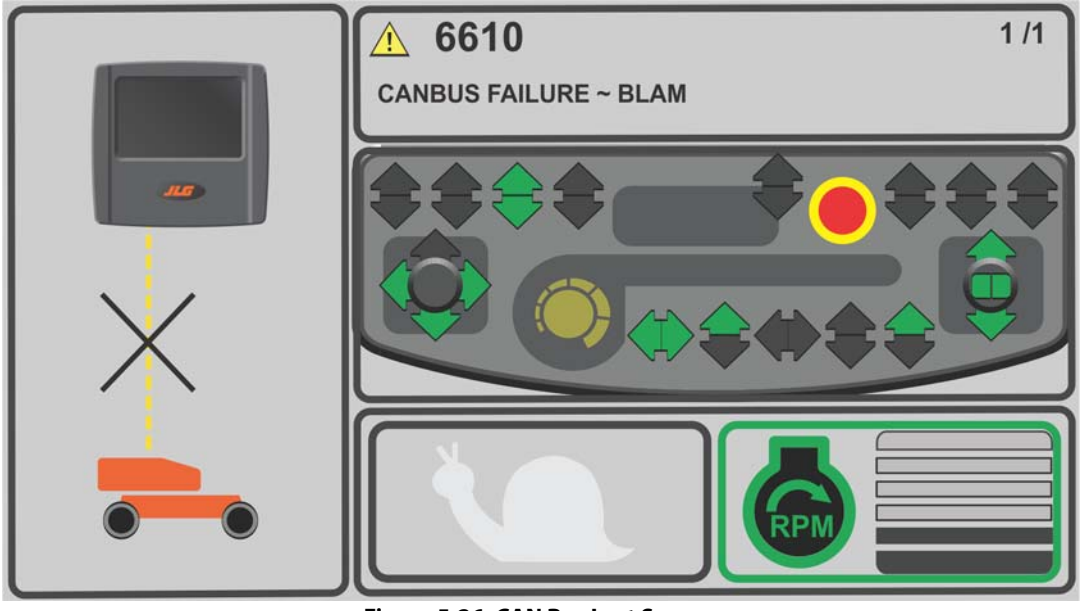

Figure 5-26. CAN Bus Lost Screen

Take Foot Out

When the footswitch is pressed and the control system senses a Take Foot Out DTC, the displays shows the Take Foot Out image in the machine status tray.

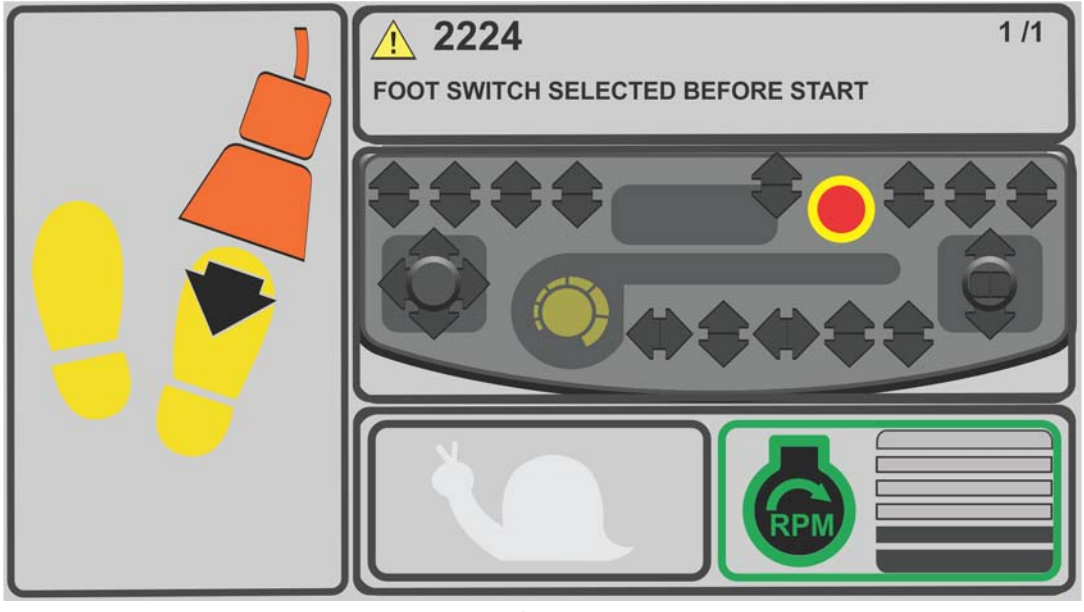

Figure 5-27. Take Foot Out Screen

Put Foot In

When the operator operates the machine without putting his foot on switch, Put Foot In DTC becomes active after timeout.

When put foot in DTC is active, the display shows Put Foot In image in the machine status tray.

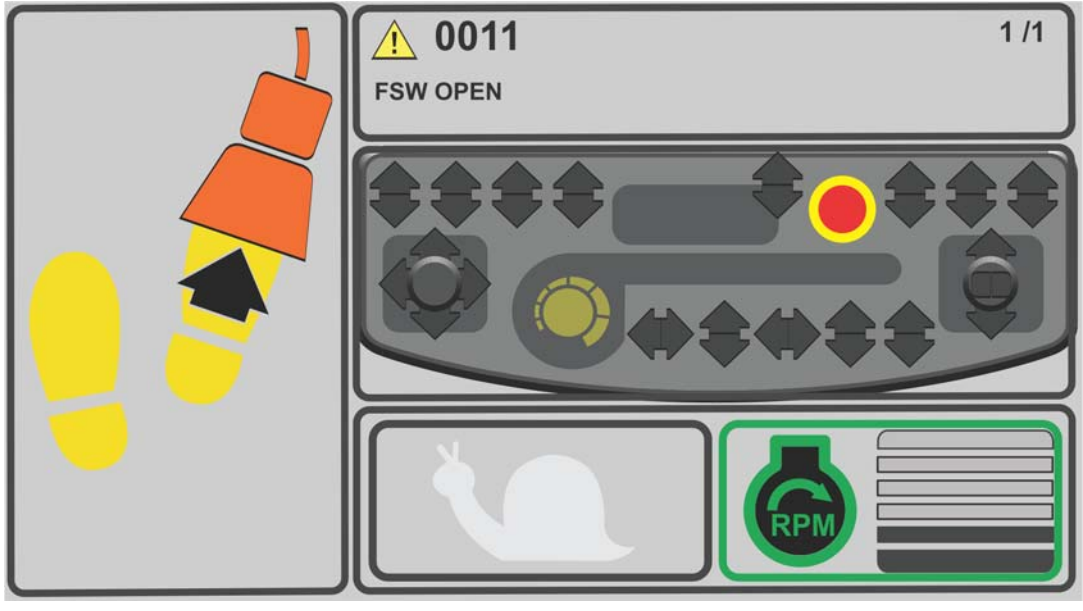

Figure 5-28. Put Foot In Screen

BCS Lamp On

When the control system senses forward or backward envelope violation or moment violation conditions, the BCS Lamp will be ON. When the BCS Lamp is ON, the display shows a red octagon image in the machine status tray indicating a potentially hazardous situation.

- The DTCs that triggered this BCS Lamp will be scrolled in the DTC tray.

NOTE: *The available controls will be different among the different DTCs. The image below is ONLY for envelope violation.*

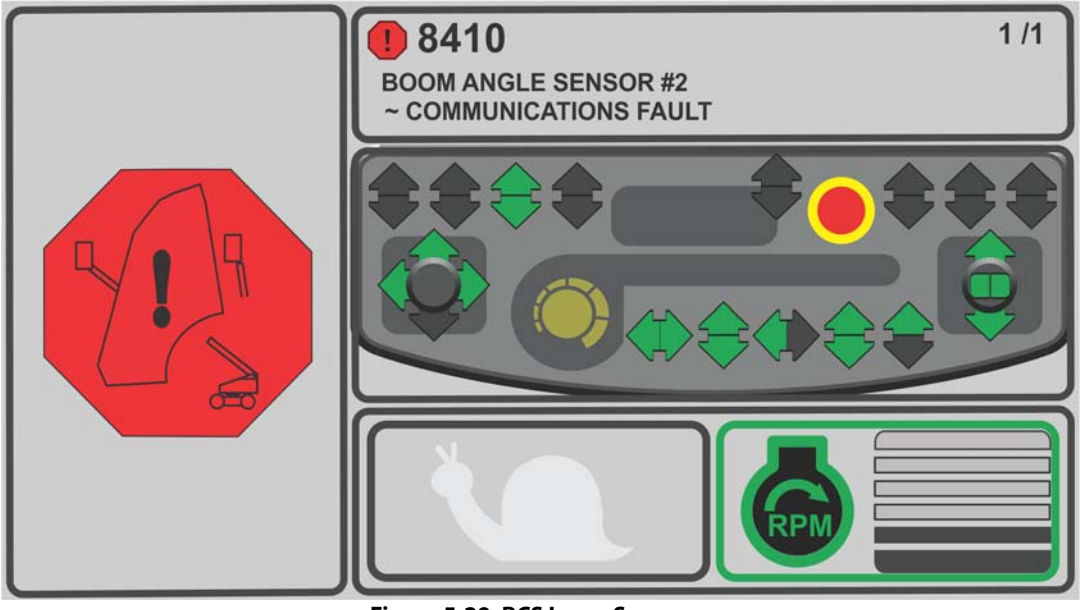

Figure 5-29. BCS Lamp Screen

Broken Cable

When the control system senses a broken cable, the Broken Cable lamp on the platform panel is lit. When the lamp is lit, the display shows a red octagon broken cable indicator in the machine status tray.

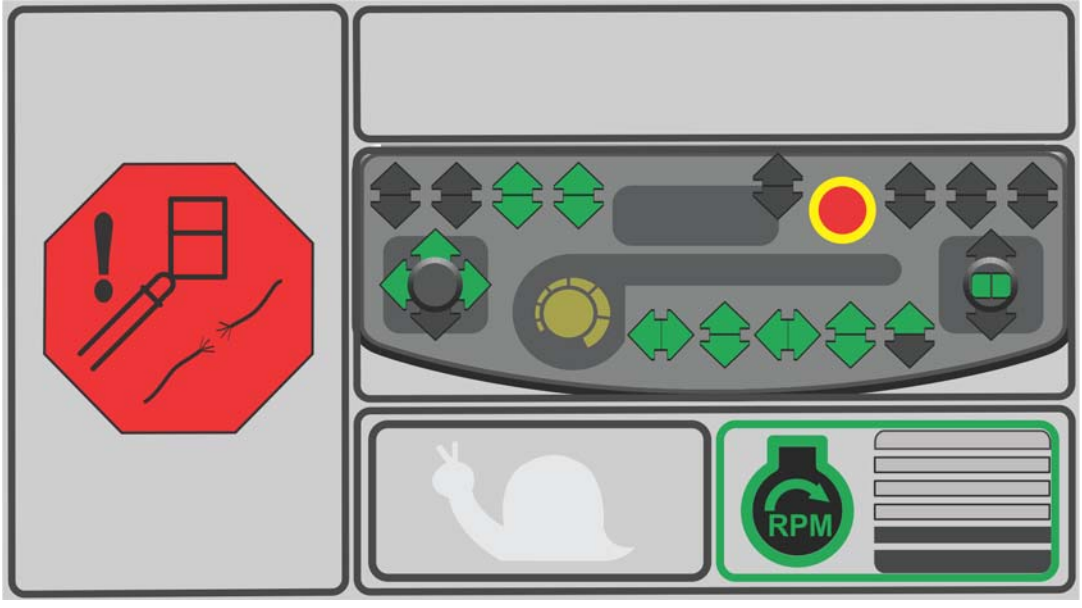

Figure 5-30. Broken Cable Screen

Platform Level

Whenever the control system senses a DTC with the platform level, the platform level lamp is lit on the platform console. When this lamp is lit, the display shows a red octagon platform level DTC indicator in the machine status tray.

Figure 5-31. Level System DTC Screen

Platform Overload

When the boom control system senses that the platform is overloaded, the Platform Overload indicator on the platform console will be lit.

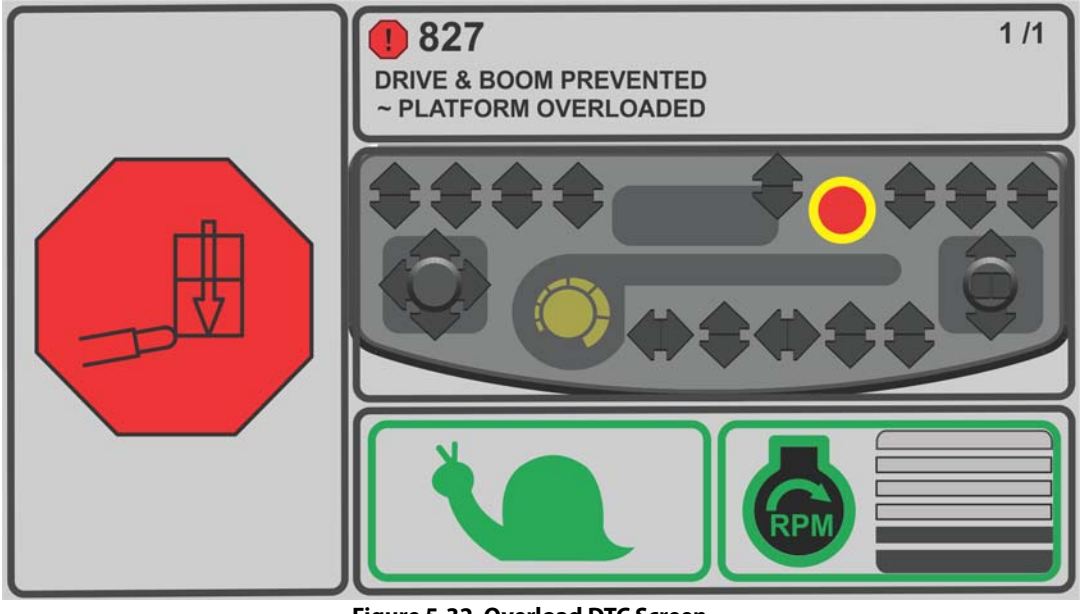

Figure 5-32. Overload DTC Screen

Capacity Mode Error

If the operator selects the incorrect capacity mode for the jib configuration (i.e., if the operator is in Unrestricted mode with the jib completely telescoped out, and changes the capacity to Restricted mode), the capacity mode indicator icon will flash in the Machine Status tray every second.

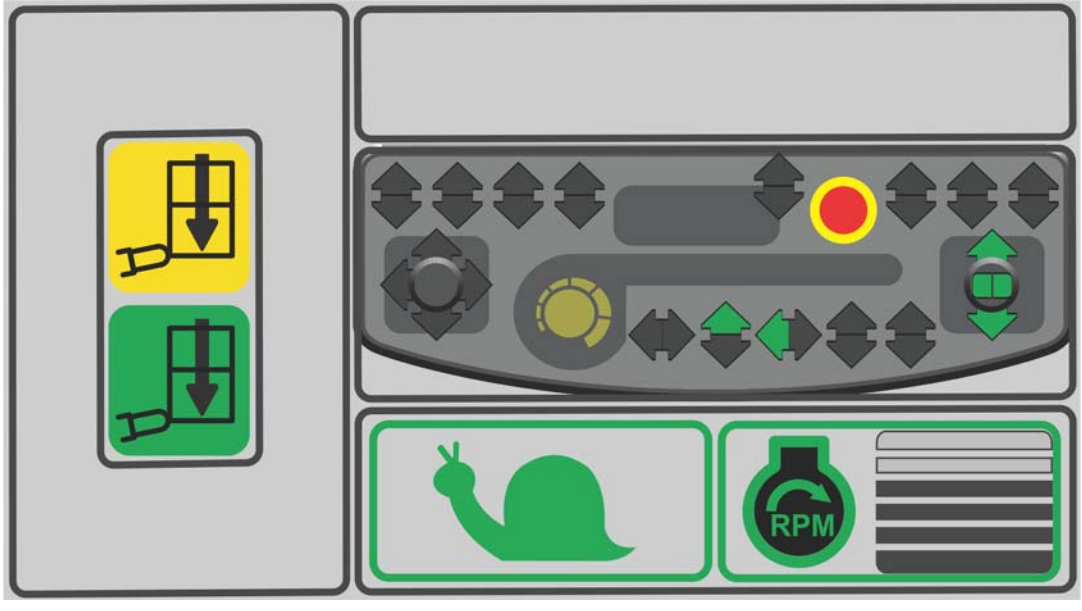

Figure 5-33. Capacity Mode Error Screen

Swing DTCs

When the machine is swung more than what it is allowed for in either left or right direction, the control system senses a swing fault. When a swing DTC is active, the display shows a machine image with green arc which indicates the allowed angle and the portion other than the green arc indicates the restricted area to show the swing DTC. Displays shows operator to extend the axles by flashing the axles.

- Swing DTC will be displayed on the DTC tray with the number and system distress icon.
- Available functions on the machine are shown with green arrows. Functions that are not available are grayed out.
- RPM and speed restriction icon will be displayed in the Icons tray.

NOTE: *Image below shows a left swing DTC. For right swing DTC, the boom will be shown swung to the right.*

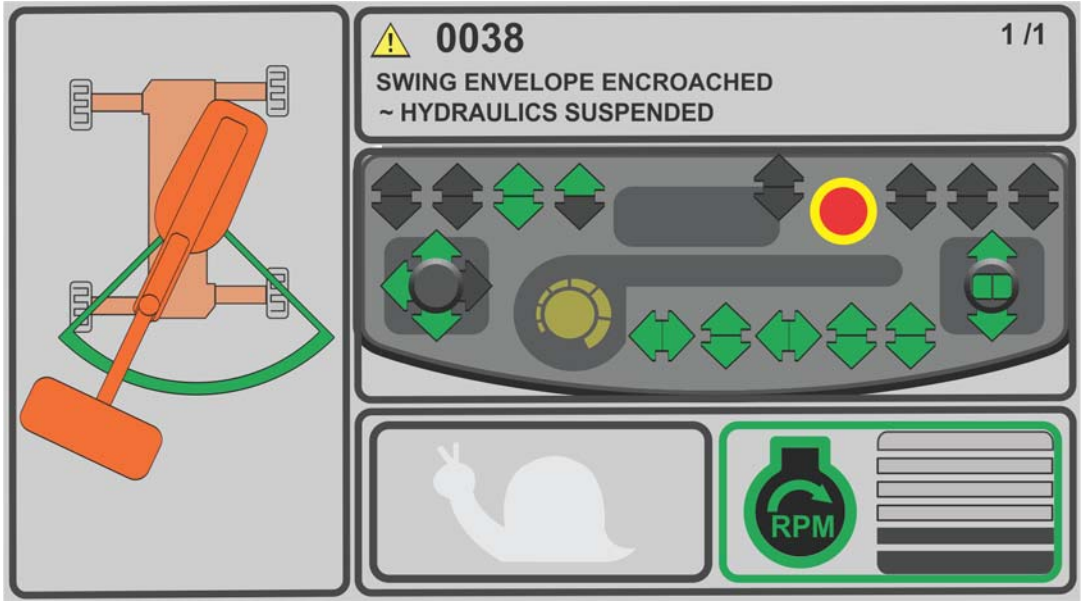

Figure 5-34. Swing DTC Screen

Jib Unlocked

When the control system senses that jib pin is unlocked, the display will show the Jib Unlocked image.

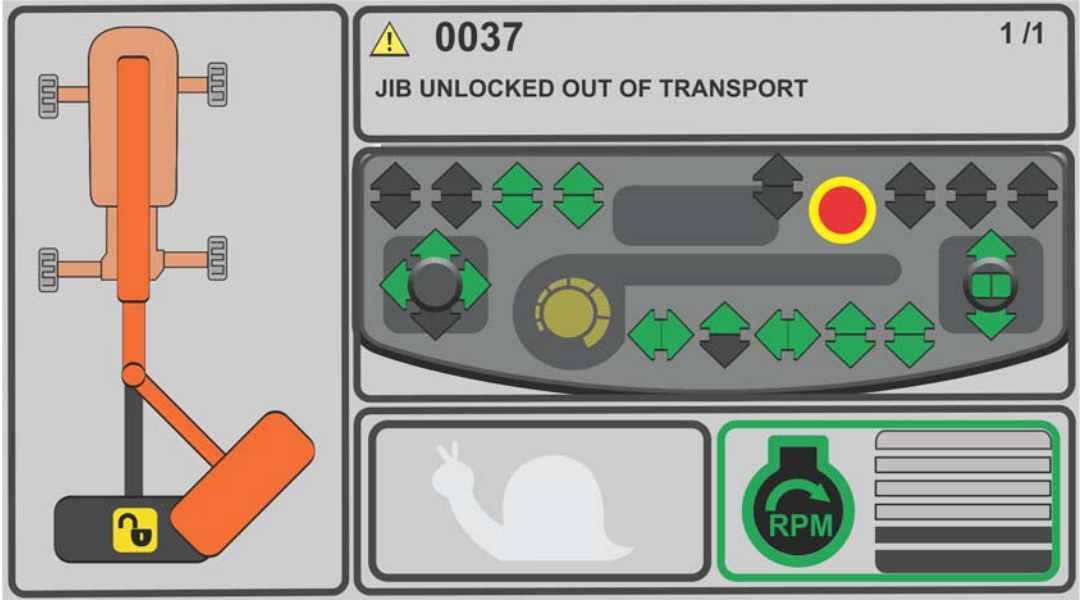

Figure 5-35. Jib Unlocked Screen

Jib Locked

When the boom control system senses jib is locked **ONLY** for the first time, the display will show the Jib Locked image on the machine status tray for 3 seconds.

The display will show a different image on the machine status tray after 3 seconds have elapsed.

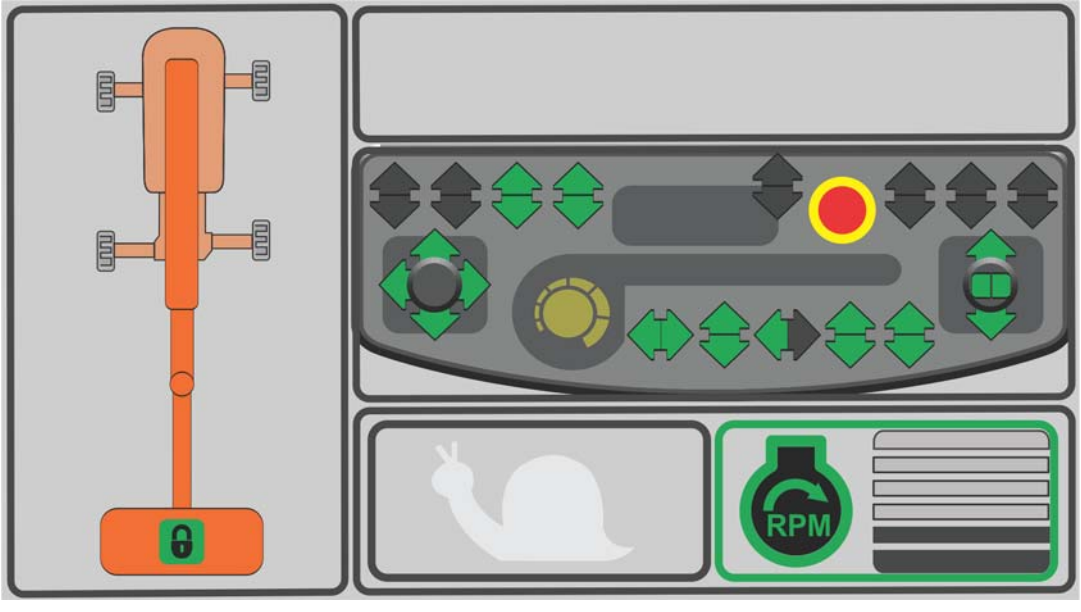

Figure 5-36. Jib Locked Screen

Chassis Status

AXLES RETRACTED IN TRANSPORT POSITION

When the axles are retracted regardless of engine state, the display shows the following screen. The Axles Retracted image is shown on the left side of the display or machine status tray. This image will be shown until the axles are extended.

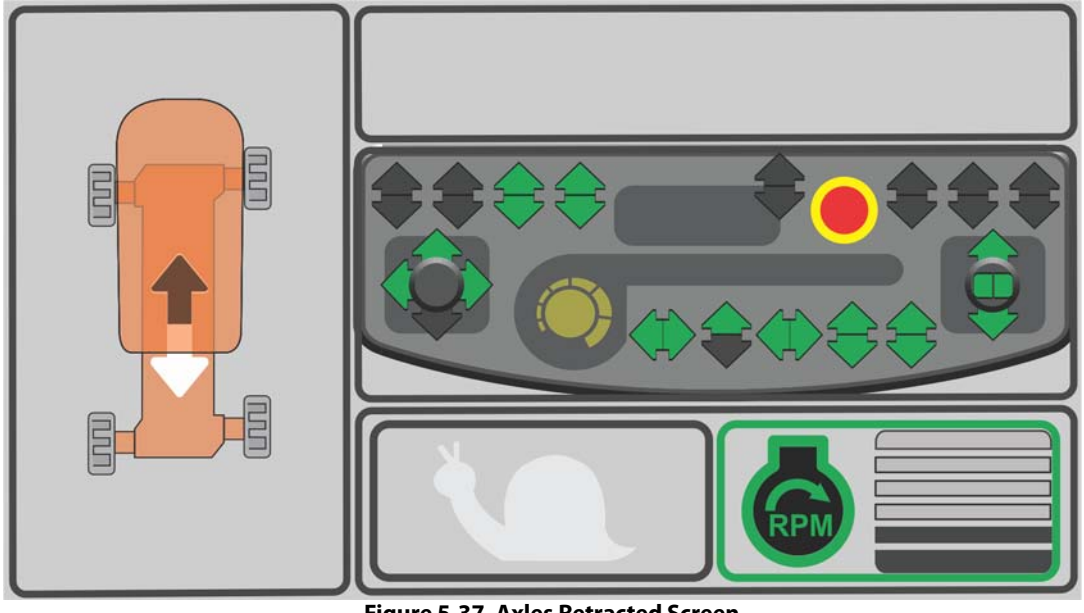

Figure 5-37. Axles Retracted Screen

AXLES EXTENDED

When the axles are extended for the first time (meaning previous state is retracted and current state is extended), regardless of the Engine state, the Axles Extended image will show up on the machine status tray for first 3 seconds.

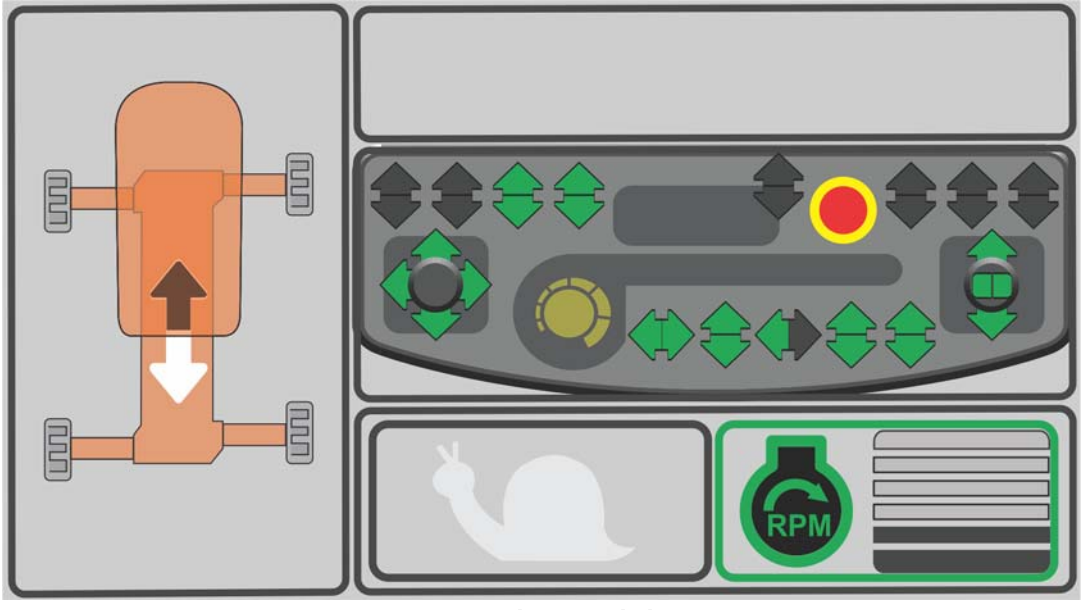

Figure 5-38. Axles Extended Screen

AXLES RETRACTED IN OUT OF TRANSPORT POSITION

When the axles are retracted and the machine is in the out of transport position, the display will switch between axles extended and retracted every 0.5 seconds to tell the operator to extend the axles so the boom can be raised.

Machine Tilted Mode

When the control system senses the chassis is on an excessive slope, the display will show the Machine Tilted image in the machine status tray.

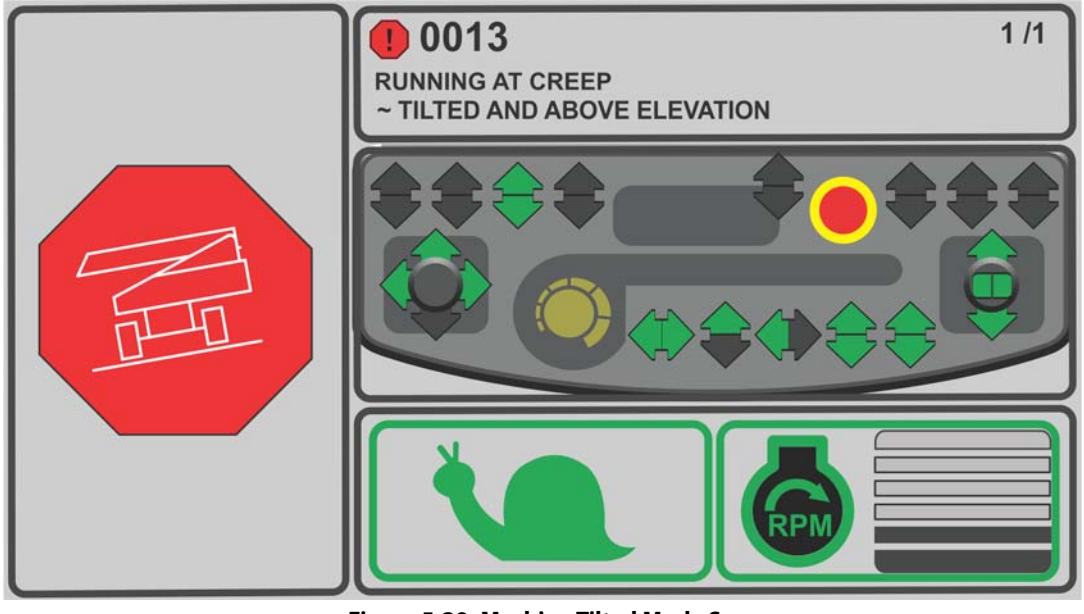

Figure 5-39. Machine Tilted Mode Screen

Envelope Status

Example 1: Platform is not at the edge of the envelope

- When Unrestricted or Restricted mode is selected, the display shows envelope image in the machine status tray.
- The color code for the envelope matches the capacity select decals on the machine.
- When the control system senses that the axles are fully extended, the selected envelope shows up on the machine status tray.
- The display shows animated boom length and boom angle information along with the envelope.
- Boom movement is proportional to the envelope boundaries.
- Platform location is always shown at the end of the boom.

Mode	Boom	Platform	Envelope Color
Unrestricted	Orange	Black	Yellow
Restricted	Orange	Black	Green

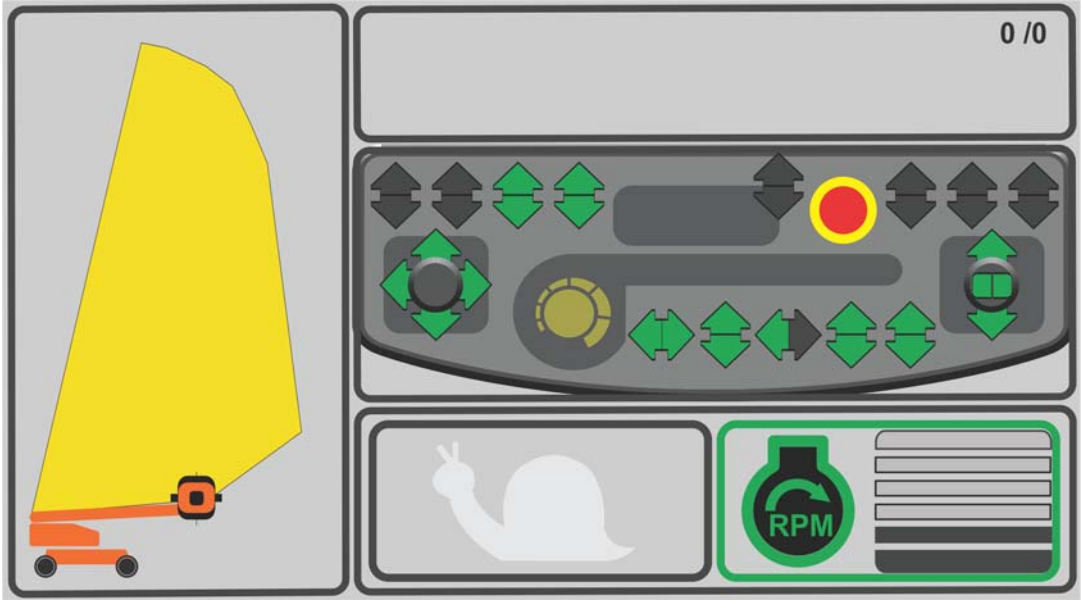

Figure 5-40. Unrestricted Mode Screen

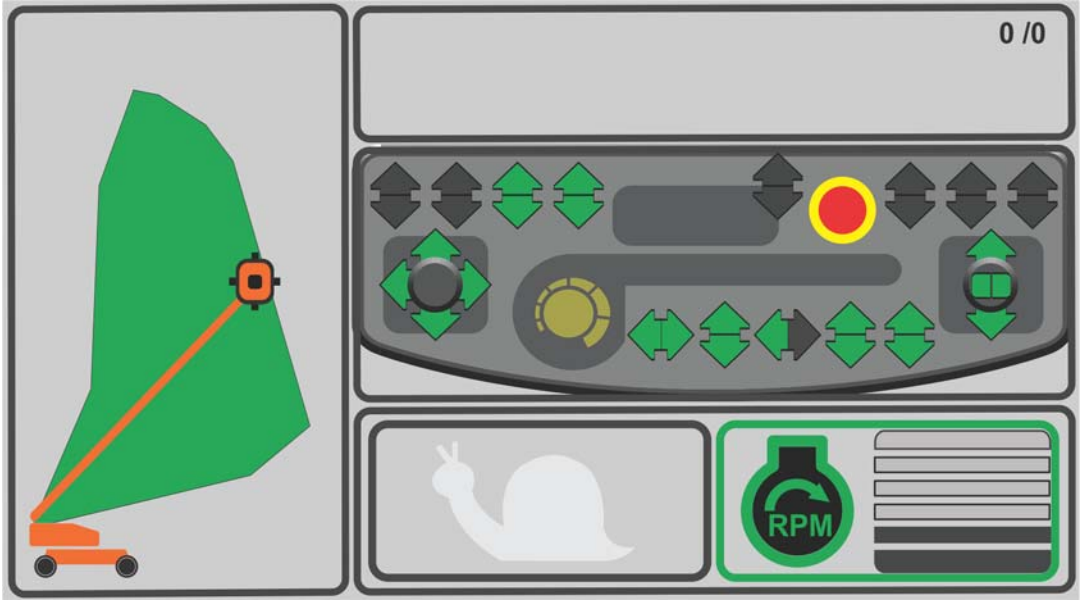

Figure 5-41. Restricted Mode Screen

- When operator switches from Unrestricted to Restricted mode, the envelope shrinks to indicate reduced operating envelope.

Example 2: Platform is edge of the envelope

- When Unrestricted or Restricted mode is selected, the display flashes snail image at a rate of 0.5 seconds in the machine status tray.
- The envelope color will match the weight mode selected.

Example 3: Unrestricted mode with envelope tilt condition

- When on the Unrestricted envelope screen, if the operator experiences a tilt condition where tilt is less than what the machine is configured for, then the envelope will shrink further to show that the new envelope.
- Display shows animated boom length and boom angle information along with the new envelope.
- Boom movement is proportional to envelope boundaries.
- Platform location is always at the end of the boom.

Example 4: Restricted mode with envelope tilt condition

- When on the Restricted envelope screen, if the operator experiences a tilt condition where tilt is less than what the machine is configured for, then the envelope will shrink further to show that the new envelope.
- Display shows animated boom length and boom angle information along with the new envelope.
- Boom movement is proportional to envelope boundaries.
- Platform location is always at the end of the boom.

Machine Model Unknown

As soon as the machine is powered up, the control system checks the model of the machine and if the model is neither 1500SJ nor 1850SJ the display will show the Machine Model Unknown image on the machine status tray.

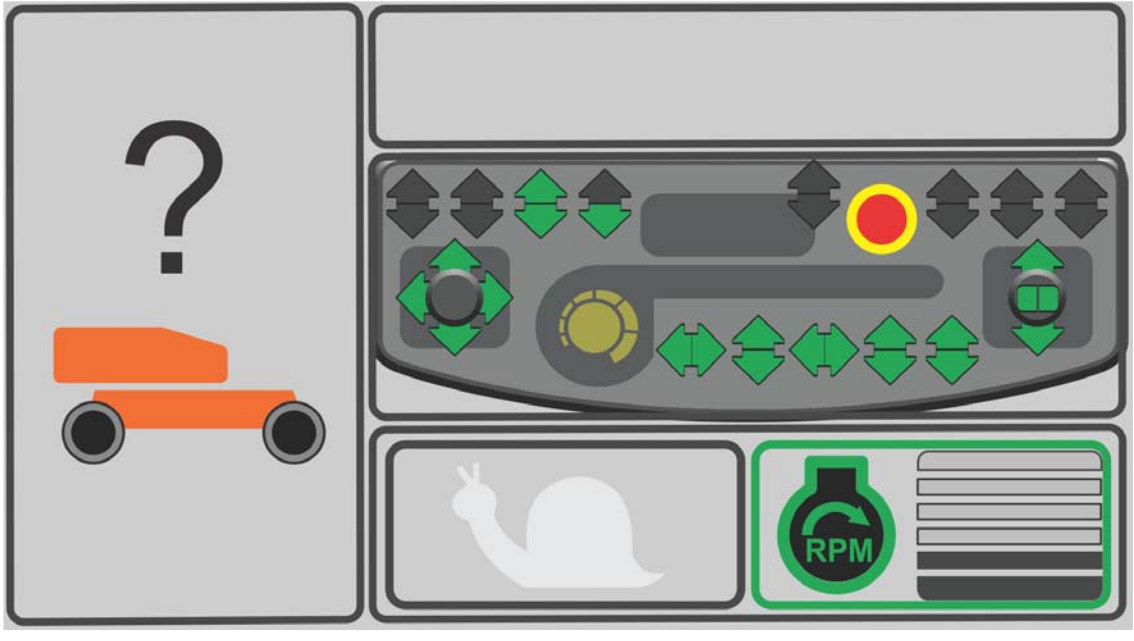

Figure 5-42. Machine Model Unknown Screen

5.5 OPERATIONAL FAULT CODE LISTING

Table 5-1. Operational Fault Codes

Fault Code	Description
001	EVERYTHING OK
0010	RUNNING AT CUTBACK - OUT OF TRANSPORT POSITION
0011	FSW OPEN
0012	RUNNING AT CREEP - CREEP SWITCH OPEN
0013	RUNNING AT CREEP - TILTED AND ABOVE ELEVATION
0014	CHASSIS TILT SENSOR OUT OF RANGE
0015	LOAD SENSOR READING UNDER WEIGHT
0016	ENVELOPE ENCROACHED - HYDRAULICS SUSPENDED
0017	OVER MOMENT - HYDRAULICS SUSPENDED
0018	UNDER MOMENT - HYDRAULICS SUSPENDED
0030	RUNNING AT CREEP - PLATFORM STOWED
0035	APU ACTIVE
0037	JIB UNLOCKED OUT OF TRANSPORT - HYDRAULICS SUSPENDED
0038	SWING ENVELOPE ENCROACHED - HYDRAULICS SUSPENDED
2211	FSW INTERLOCK TRIPPED
2212	DRIVE LOCKED - JOYSTICK MOVED BEFORE FOOTSWITCH
2213	STEER LOCKED - SELECTED BEFORE FOOTSWITCH
2221	LIFT/SWING LOCKED - JOYSTICK MOVED BEFORE FOOTSWITCH

Table 5-1. Operational Fault Codes

Fault Code	Description
2222	WAITING FOR FSW TO BE OPEN
2223	FUNCTION SWITCHES LOCKED - SELECTED BEFORE ENABLE
2224	FOOTSWITCH SELECTED BEFORE START
235	FUNCTION SWITCHES LOCKED - SELECTED BEFORE AUX POWER
236	FUNCTION SWITCHES LOCKED - SELECTED BEFORE START SWITCH
237	START SWITCH LOCKED - SELECTED BEFORE KEYSWITCH
259	MODEL CHANGED - HYDRAULICS SUSPENDED - CYCLE EMS
2513	GENERATOR MOTION CUTOUT ACTIVE
2514	BOOM PREVENTED - DRIVE SELECTED
2515	DRIVE PREVENTED - BOOM SELECTED
2516	DRIVE PREVENTED - ABOVE ELEVATION
2517	DRIVE PREVENTED - TILTED & ABOVE ELEVATION
2521	JIB SWING PREVENTED - IN 1000# MODE

SECTION 6. EMERGENCY PROCEDURES

6.1 GENERAL

This section explains the steps to be taken in case of an emergency situation while operating.

6.2 INCIDENT NOTIFICATION

JLG Industries, Inc. must be notified immediately of any incident involving a JLG product. Even if no injury or property damage is evident, the factory should be contacted by telephone and provided with all necessary details.

- USA: 877-JLG-SAFE (554-7233)
- EUROPE: (32) 0 89 84 82 20
- AUSTRALIA: (61) 2 65 811111
- E-mail: ProductSafety@JLG.com

Failure to notify the manufacturer of an incident involving a JLG Industries product within 48 hours of such an occurrence may void any warranty consideration on that particular machine.

NOTICE

FOLLOWING ANY ACCIDENT, THOROUGHLY INSPECT THE MACHINE AND TEST ALL FUNCTIONS FIRST FROM THE GROUND CONTROLS, THEN FROM THE PLATFORM CONTROLS. DO NOT LIFT ABOVE 3 M (10 FT.) UNTIL YOU ARE SURE THAT ALL DAMAGE HAS BEEN REPAIRED, IF REQUIRED, AND THAT ALL CONTROLS ARE OPERATING CORRECTLY.

6.3 EMERGENCY OPERATION

Operator Unable to Control Machine

IF THE PLATFORM OPERATOR IS PINNED, TRAPPED OR UNABLE TO OPERATE OR CONTROL MACHINE:

1. Other personnel should operate the machine from ground controls only as required.
2. Other qualified personnel on the platform may use the platform controls. DO NOT CONTINUE OPERATION IF CONTROLS DO NOT FUNCTION PROPERLY.
3. Cranes, forklift trucks or other equipment can be used to remove platform occupants and stabilize motion of the machine.

Platform or Boom Caught Overhead or Boom Movement Prevented by Boom Control System

Lowering the boom onto an object or structure may cause the boom control system to prevent movement of the machine. This can include movement necessary to lift the boom off the object. Additionally, if the platform or boom becomes jammed or snagged in overhead structures, movement of the boom can be regained by doing the following:

1. Shut off the machine.
2. Rescue all people in the platform before freeing the machine. Personnel must be out of the platform before operating any controls on the machine.
3. Use cranes, forklifts, or other equipment to stabilize motion of the machine to prevent a tip over as required.
4. From the ground controls, use the Auxiliary Power System to carefully free the platform or boom from the object.
5. Once clear, restart the machine and return the platform to a safe position.
6. Inspect the machine for damage. If the machine is damaged or does not operate properly, turn off the machine immediately. Report the problem to the proper maintenance personnel. Do not operate the machine until it is declared safe for operation.

6.4 EMERGENCY TOWING PROCEDURES

Towing this machine is prohibited, unless properly equipped. However, provisions for moving the machine have been incorporated. For specific procedures, refer to Section 4.

6.5 MACHINE SAFETY SYSTEM OVERRIDE (MSSO)(CE ONLY)

The Machine Safety System Override (MSSO) is only to be used to retrieve an operator that is pinned, trapped, or unable to operate the machine and function controls are locked out from the platform due to a platform overload situation.

NOTE: *If the MSSO functionality is used, the fault indicator will flash and a fault code is set in the JLG Control System which must be reset by a qualified JLG Service Technician.*

NOTE: *No functional checks of the MSSO system are necessary. The JLG Control system will set a Diagnostic Trouble Code if the control switch is faulty.*

To operate the MSSO:

1. From the ground control console, place the Platform/ Ground Select switch in the Ground position.
2. Pull out the Power/Emergency Stop control.
3. Start the engine.
4. Press and hold the MSSO switch and the control switch for the desired function.

NOTES:

SECTION 7. ACCESSORIES

Table 7-1. Available Accessories

Accessory	Market						
	ANSI (USA Only)	ANSI	CSA	CE	AUS	Japan	China
Fall Arrest Platform (36" x 96")	√			√	√		
Pipe Racks	√		√		√		
SkyCutter™	√	√	√			√	√
SkyGlazier™	√		√		√		
SkyPower™	√	√	√	√	√	√	√
SkyWelder™	√	√	√	√		√	√
Soft Touch	√	√	√	√	√	√	√
Bolt-On External Fall Arrest(36" x 96")	√	√	√			√	√

Table 7-2. Options/Accessories Relationship Table

ACCESSORY	REQUIRED ITEM	COMPATIBLE WITH (Note 1)	INCOMPATIBLE WITH	INTERCHANGABLE WITH (Note 2)
Pipe Racks		SkyPower™	Platform MMR**, Platform MTR*, Soft Touch	SkyCutter™, SkyGlazier™, SkyWelder™
SkyCutter™	SkyPower™	SkyWelder™	4' Platform, Pipe Racks, Platform MTR*, Soft Touch	SkyGlazier™
SkyGlazier™		SkyPower™	4' Platform, Pipe Racks, Platform MTR*, Soft Touch	SkyCutter™, SkyWelder™
SkyPower™		SkyCutter™, SkyGlazier™, SkyWelder™		
SkyWelder™	SkyPower™	SkyCutter™	4' Platform, Pipe Racks, Platform MTR*, Soft Touch	SkyGlazier™
Soft Touch		SkyPower™	Pipe Racks, SkyCutter™, SkyGlazier™, SkyWelder™	
Note 1: Any non-"Sky" accessory not listed under "INCOMPATIBLE WITH" is assumed to be compatible.				
Note 2: Can be used on same unit but not simultaneously.				
* Platform MTR = Platform Mesh to Top Rail; ** Platform MMR = Platform Mesh to Mid Rail				

4150459 M

⚠ WARNING

INSTALLING OR REMOVING APPROVED ACCESSORIES OR CHANGING PLATFORM SIZE REQUIRES RECALIBRATION OF THE BOOM CONTROL SYSTEM (SEE SERVICE AND MAINTENANCE MANUAL).

7.1 FALL ARREST PLATFORM

NOTE: *See the JLG External Fall Arrest System manual (PN 3128935) for more detailed information.*

The external fall arrest system is designed to provide a lanyard attach point while allowing the operator to access areas outside the platform. Exit/enter the platform through the gate area only. The system is designed for use by one person.

Personnel must use fall protection at all times. A full body harness is required with lanyard not to exceed 6 ft (1.8 m) in length, that limits the maximum arrest force to 900 lbs (408 kg) for the transfastener type and 1350 lbs (612 kg) for the shuttle type fall arrest system.

Safety Precautions

⚠ WARNING

DO NOT OPERATE ANY MACHINE FUNCTIONS WHILE OUTSIDE THE PLATFORM. USE CAUTION WHEN ENTERING/EXITING THE PLATFORM AT ELEVATION.

7.2 PIPE RACKS

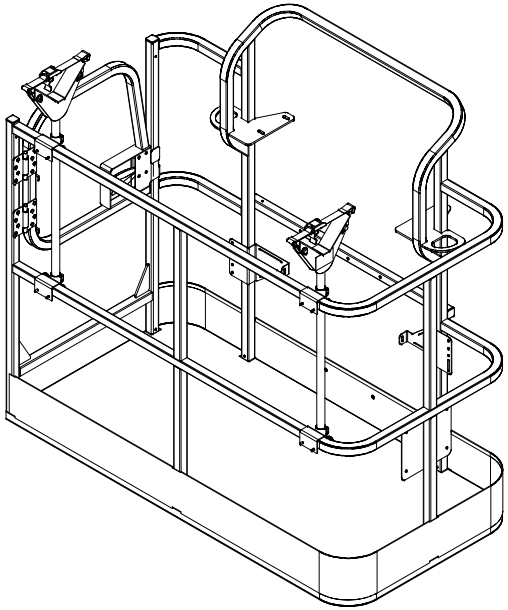

Pipe Racks provide a way to store pipe or conduit inside the platform in order to prevent rail damage and optimize platform utility. This accessory consists of two racks with adjustable straps to secure the load in place.

Capacity Specifications (Australia Only)

Max. Capacity in Racks	Max. Platform Capacity (With Max. Weight in Racks)
80 kg	184 kg
Max. Length of Material in Racks: 6.0 m **Min. Length of Material in Racks:** 2.4 m	

Safety Precautions

⚠ WARNING

REDUCE PLATFORM CAPACITY BY 100 LBS (45.5 KG) WHEN INSTALLED.

⚠ WARNING

WEIGHT IN RACKS PLUS WEIGHT IN PLATFORM MUST NOT EXCEED RATED CAPACITY.

NOTICE

THE MAXIMUM LOAD IN THE RACKS IS 180 LBS (80 KG) EVENLY DISTRIBUTED BETWEEN THE TWO RACKS.

NOTICE

THE MAXIMUM LENGTH OF MATERIAL IN RACKS IS 20 FT (6.1 M).

- Ensure no personnel are beneath the platform.
- Do not exit platform over rails or stand on rails.
- Do not drive machine without material secured
- Return racks to the stowed position when not in use.
- Use this option only on approved models.

Preparation and Inspection

- Ensure racks are secured to the platform rails.
- Replace torn or frayed tie-down straps.

Operation

1. To prepare racks for loading, remove locking pins, rotate each rack 90 degrees from stowed to working position, then secure with locking pins.
2. Loosen and remove tie-down straps. Place material on racks with weight evenly distributed between both racks.
3. Route the tie-down straps at each end across loaded material and tighten.
4. To remove material, loosen and remove tie-down straps, then carefully remove material from racks.

NOTE: *Reinstall tie-down straps across any remaining material before continuing machine operations.*

7.3 SKYCUTTER™

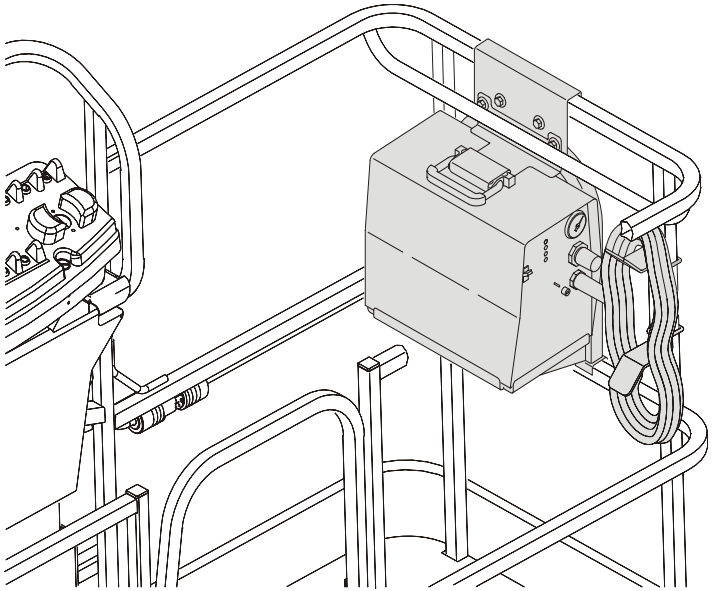

SkyCutter™ is capable of cutting up to a thickness of 3/8" metal. It can produce 27 A at 92 VDC at 35% duty cycle or 14 A at 92 VDC at 60% duty cycle. This accessory receives power from the Sky-Power™ system.

Safety Precautions

⚠ WARNING

DO NOT OVERLOAD PLATFORM.

⚠ WARNING

DE-RATE THE PLATFORM BY 70 LBS (32 KG) WHEN PLASMA CUTTER IS IN PLATFORM.

- Check for cracked welds and damage to plasma supports.
- Check for secure installation of cutter and bracket.
- Ensure no personnel are beneath platform.
- Do not exit platform over rails or stand on rails.
- Use this option only on approved models.
- Keep lanyard attached at all times.
- Use correct cutting settings.
- Do not use electrical cords without ground.
- Do not use electrical tools in water.
- Do not cut platform, or ground through the platform.
- Wear proper cutting apparel.
- Do not drive machine while connected to external air/gas sources.

Accessory Ratings

Spec.	Rated Output	Amperes Input @ Rated Output, 60 Hz, 1-Phase	kVa/kW	Plasma Gas	Plasma Gas Flow/ Pressure	Rated Cutting Capacity @ 10 IPM	Max. OCV
120 Volts ±10% (20 A)	27 A @ 91 VDC @ 20% Duty Cycle	28.8 max; 0.30*	3.4 kVa 3.2 kW	Air or Nitrogen Only @ 90 - 120 psi (621 - 827 kPa)	4.5 cfm (129 L/Min) @ 60 psi (414 kPa)	3/8 in (10 mm)	400 VDC
120 Volts ±10% (15 A)	20 A @ 88 VDC @ 35% Duty Cycle	20.6 max; 0.30*	2.5 kVa 2.3 kW				
240 Volts ±10% (27 A)	27 A @ 91 VDC @ 35% Duty Cycle	13.9 max; 0.13*	3.3 kVa 3.0 kW				
* While idling.							

Generator Output

Engine Speed of 1800 rpm +/- 10%.

ANSI Specifications:

- 3-phase: 240 V, 60 Hz, 7.5 kW
- 1-phase: 240 V/120 V, 60 Hz, 6 kW

Preparation and Inspection

- Connect ground clamp to metal being cut.
- Ensure there is a good ground connection.

Operation

Start the engine, turn on the generator, then turn on the plasma cutter.

See the Miller Plasma Cutter Owner's Manual (PN 3128420) for more information.

7.4 SKYGLAZIER™

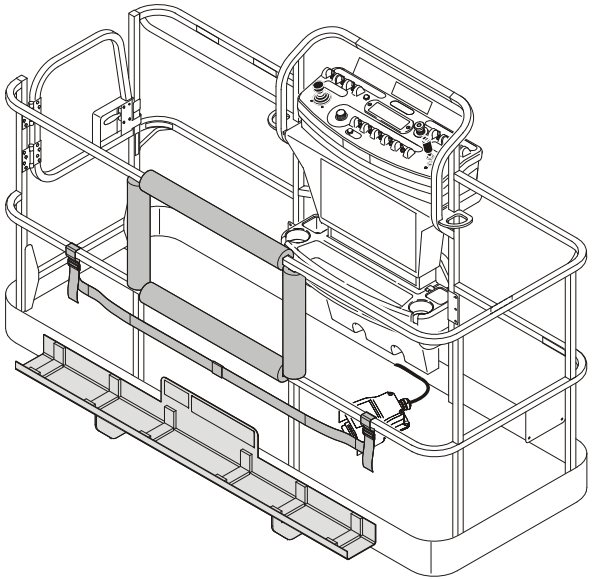

SkyGlazier™ allows glaziers to position panels efficiently. The glazier package consists of a tray that attaches the bottom of the platform. The panel rests on the tray and against top-rail of the platform, which is padded to prevent damage. SkyGlazier™ includes a strap to secure the panel to the platform rail.

Capacity Specifications

Capacity Zone *	Max. Tray Capacity	Max. Platform Capacity (With Max. Weight in Tray)
500 lbs (227 kg)	150 lbs (68 kg)	250 lbs (113 kg)
550 lbs (250 kg)	150 lbs (68 kg)	250 lbs (113 kg)
600 lbs (272 kg)	150 lbs (68 kg)	250 lbs (113 kg)
750 lbs (340 kg)	150 lbs (68 kg)	440 lbs (200 kg)
1000 lbs (454 kg)	250 lbs (113 kg)	500 lbs (227 kg)

* Refer to the capacity decals installed on the machine for capacity zone information.

Required Platform Type: Side-Entry

Max. Dimensions of Panel: 32 sq ft (3 sq m)

⚠ WARNING

INSTALLING OR REMOVING APPROVED ACCESSORIES OR CHANGING PLATFORM SIZE REQUIRES RECALIBRATION OF THE BOOM CONTROL SYSTEM (SEE SERVICE AND MAINTENANCE MANUAL).

Safety Precautions

⚠ WARNING

ENSURE PANEL IS SECURED WITH STRAP.

⚠ WARNING

DO NOT OVERLOAD TRAY OR PLATFORM. TOTAL MACHINE CAPACITY IS REDUCED WHEN TRAY IS INSTALLED.

⚠ WARNING

WITH SKYGLAZIER™ INSTALLED, THE ORIGINAL PLATFORM CAPACITY RATINGS ARE REDUCED AS SPECIFIED IN THE CAPACITY SPECIFICATIONS TABLE. DO NOT EXCEED NEW PLATFORM CAPACITY RATINGS. REFER TO CAPACITY DECAL LOCATED ON TRAY.

⚠ WARNING

AN INCREASE OF THE AREA EXPOSED TO THE WIND WILL DECREASE STABILITY. LIMIT PANEL AREA TO 32 SQ FT (3 SQ M).

- Ensure no personnel are beneath platform.
- Do not exit platform over rails or stand on rails.
- Remove tray when not in use.
- Use this option only on approved models.

Preparation and Inspection

- Check for cracked welds and damage to tray.
- Ensure tray is properly secured to platform.
- Ensure strap is not torn or frayed.

Operation

1. Load SkyGlazier™ tray with panel.
2. Route the adjustable strap around the panel and tighten until secure.
3. Position panel to its desired location.

7.5 SKYPOWER™

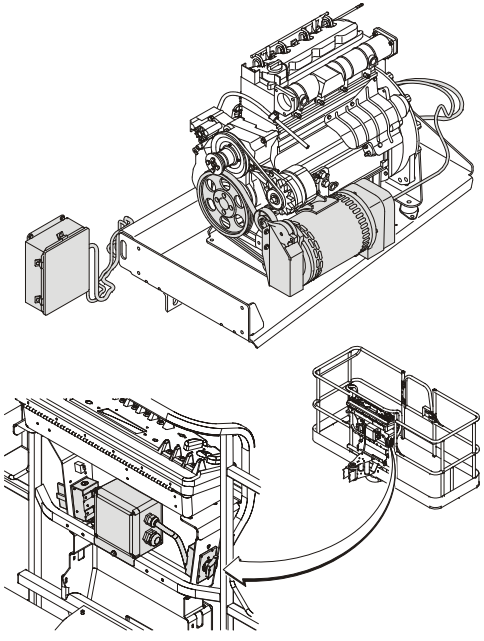

The SkyPower™ system supplies AC power to the platform through an AC receptacle to run tools, lights, cutting, and welding equipment.

All power regulation components are located in a watertight box connected by cable to the generator. The generator supplies power when running at the specified speed with the power switch on (switch is located on platform). A three-pole, 30 Amp circuit breaker protects the generator from overload.

Generator Output

ANSI Specifications:

- 3-phase: 240 V, 60 Hz, 7.5 kW
- 1-phase: 240 V/120 V, 60 Hz, 6 kW

CE Specifications:

- 3-phase: 240 V, 7.5 kW, 18.3 A, 1.0-pf
- 1-phase: 240 V, 6.0 kW, 26 A, 1.0-pf
- 1-phase: 120 V, 6.0 kW, 50 A, 1.0-pf

Peak:

- 3-phase: 8.5 kW
- 1-phase: 6.0 kW

Accessory Ratings

- 3000 rpm (50 Hz)
- 3600 rpm (60 Hz)

Safety Precautions

⚠ WARNING

DO NOT OVERLOAD PLATFORM.

- Ensure no personnel are beneath platform.
- This factory-installed option is available only on specified models.
- Keep lanyard attached at all times.
- Do not use electrical tools in water.
- Use correct voltage for tool being used.
- Do not overload circuit.

Preparation and Inspection

- Ensure generator is secure.
- Check condition of belt and wiring.

Operation

Start the engine, then turn on the generator.

See the Miller Generator Technical Manual (PN 3121677) for more information.

7.6 SKYWELDER™

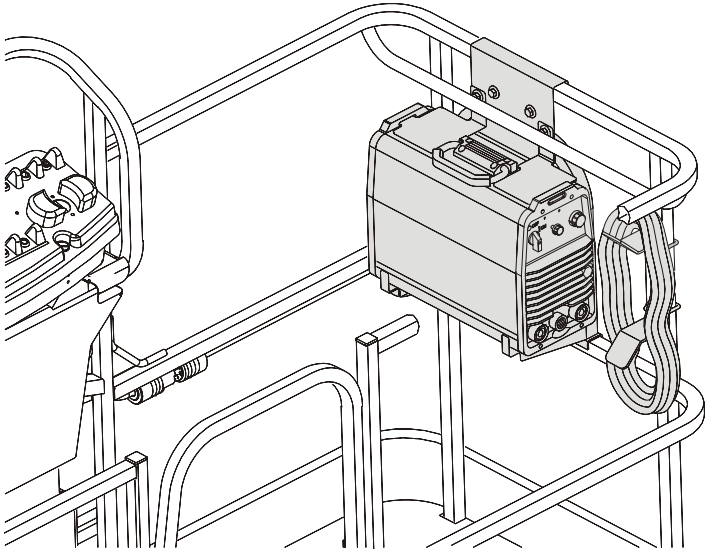

SkyWelder™ is capable of TIG and Stick welding, producing 200 Amps at 100% duty cycle or 250 Amps at 50% duty cycle. It receives power from the SkyPower™ system.

Accessory Ratings

Welding Mode	Input Power	Rated Output	Welding Amperage Range	Maximum Open Circuit Voltage	Amps Input At Rated Load Output (50/60 Hz)				
					230 V	460 V	575 V	kVa	kW
Stick (SMAW) TIG (GTAW)	3-phase	280 Amp at 31.2 V, 35% Duty Cycle	5-250 A	79 VDC	32	17	13	15.7	10
		200 Amp at 28 V, 100% Duty Cycle			20	11	8	10.3	6.4
	1-phase	200 Amp at 28 V, 50% Duty Cycle	5-200 A	79 VDC	35	------	------	9.8	6.5
		150 Amp at 28 V, 100% Duty Cycle			34	------	------	6.9	4.4

Generator Output

Engine Speed of 1800 rpm +/- 10%.

ANSI Specifications:

- 3-phase: 240 V, 60 Hz, 7.5 kW
- 1-phase: 240 V/120 V, 60 Hz, 6 kW

CE Specifications:

- 3-phase: 400 V, 50 Hz, 7.5 kW
- 1-phase: 220 V, 50 Hz, 6 kW

Welding Accessories

- 12 ft welding leads with clamp and stinger (stored in the platform)
- Fire extinguisher

Safety Precautions

⚠ WARNING

DO NOT OVERLOAD PLATFORM.

⚠ WARNING

DE-RATE THE PLATFORM BY 70 LBS (32 KG) WHEN WELDER IS IN THE PLATFORM.

- Check for cracked welds and damage to welder supports.
- Check for proper and secure installation of welder and bracket.
- Ensure no personnel are beneath platform.
- Do not exit platform over rails or stand on rails.
- Use this option only on approved models.
- Keep lanyard attached at all times.
- Ensure correct polarity of leads.
- Wear proper welding apparel.
- Use correct rod size and current settings.
- Do not use electrical cords without ground.
- Do not use electrical tools in water.
- Do not weld to the platform.
- Do not ground through the platform.
- Do not use a high frequency arc starter with TIG welder.

Preparation and Inspection

- Connect ground clamp to metal being welded.
- Ensure there is a good ground connection and observe proper polarity.

Operation

Start the engine, turn on the generator, then turn on the welder.

See the Miller Welder Owner's Manual (PN 3128957) for more information.

7.7 SOFT TOUCH

A padding kit is mounted to the platform rails and to a frame suspended below the platform. Limit switches deactivate platform functions when the padded framework contacts an adjacent structure. A button on the platform console allows override of the system.

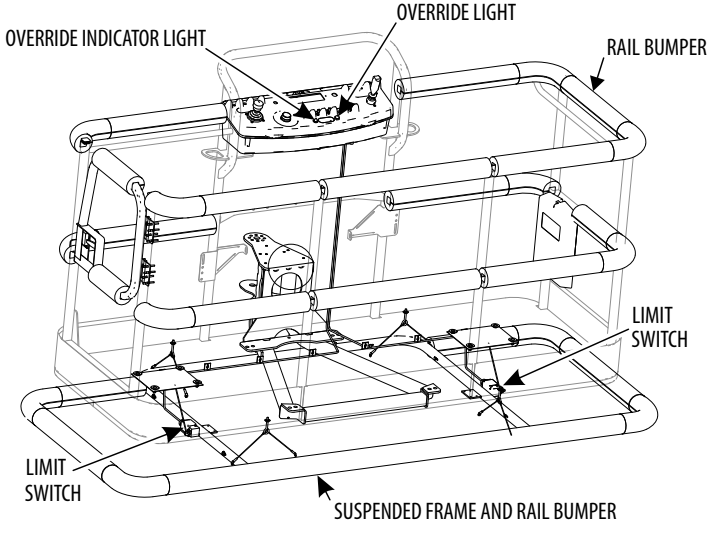

7.8 BOLT-ON EXTERNAL FALL ARREST

The bolt-on external fall arrest system is designed to provide a lanyard attach point while allowing the operator to access areas outside the platform. Exit/Enter the platform through the gate area only. The system is designed for use by one person.

Personnel must use fall protection at all times. A full body harness is required with lanyard not to exceed 6 ft. (1.8 M) in length, that limits the maximum arrest force to 900 lbs. (408 kg).

External Fall Arrest System capacity is 310 lb (140 kg) - one (1) person maximum.

Do not move platform during use of the external fall arrest system.

⚠ WARNING

DO NOT OPERATE ANY MACHINE FUNCTIONS WHILE OUTSIDE OF PLATFORM. BE CAREFUL WHEN ENTERING/EXITING THE PLATFORM AT ELEVATION.

⚠ WARNING

IF THE EXTERNAL FALL ARREST SYSTEM IS USED TO ARREST A FALL OR IS OTHERWISE DAMAGED, THE ENTIRE SYSTEM MUST BE REPLACED AND THE PLATFORM FULLY INSPECTED BEFORE RETURNING TO SERVICE. REFER TO THE SERVICE MANUAL FOR REMOVAL AND INSTALLATION PROCEDURES.

NOTICE

THE EXTERNAL FALL ARREST SYSTEM REQUIRES AN ANNUAL INSPECTION AND CERTIFICATION. THE ANNUAL INSPECTION AND CERTIFICATION MUST BE PERFORMED BY A QUALIFIED PERSON OTHER THAN THE USER.

Inspection Before Use

The external fall arrest system must be inspected before each use of the aerial work platform. Replace components if there are any signs of wear or damage.

Before each use, perform a visual inspection of the following components:

- Cable: Inspect cable for proper tension, broken strands, kinks, or any signs of corrosion.

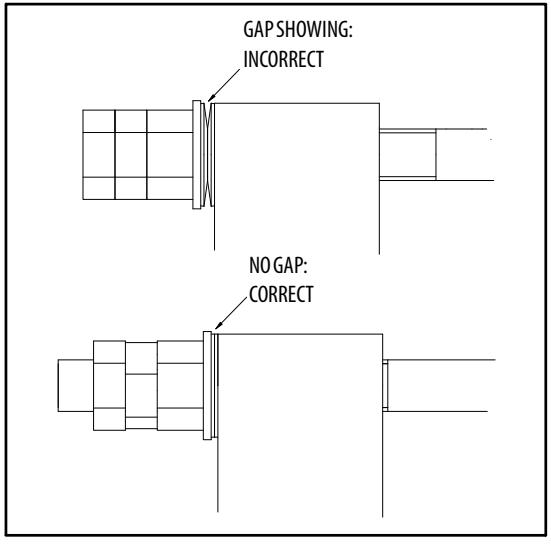

Figure 7-1. Bolt-On External Fall Arrest Cable Tension

- Fittings & Brackets: Ensure all fittings are tight and there are no signs of fractures. Inspect brackets for any damage.
- Attachment Ring: No cracks or signs of wear are acceptable. Any signs of corrosion requires replacement.
- Attaching Hardware: Inspect all attaching hardware to ensure there are no missing components and hardware is properly tightened.
- Platform Rails: No visible damage is acceptable.

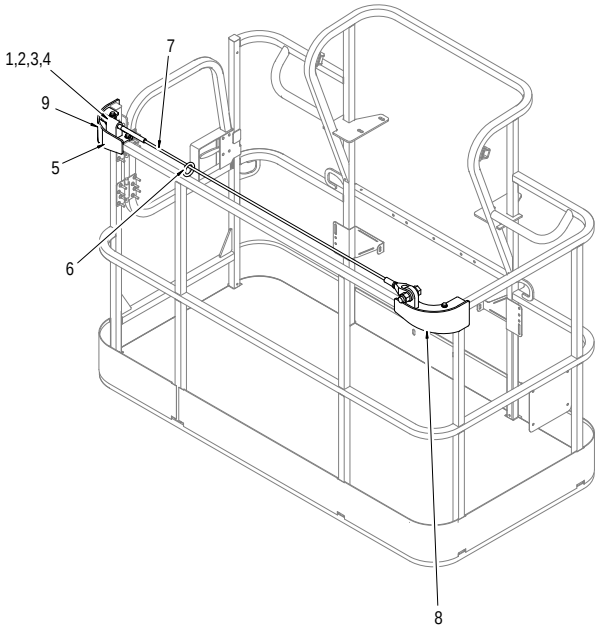

1. Belleville Washer
2. Washer
3. Hex Nut
4. Jam Nut
5. LH Bracket
6. Attachment Ring
7. Cable
8. RH Bracket
9. Decal

Figure 7-2. Bolt On Fall Arrest System

SECTION 8. GENERAL SPECIFICATIONS & OPERATOR MAINTENANCE

8.1 INTRODUCTION

This section of the manual provides additional necessary information to the operator for proper operation and maintenance of this machine.

The maintenance portion of this section is intended as information to assist the machine operator to perform daily maintenance tasks only, and does not replace the more thorough Preventive Maintenance and Inspection Schedule included in the Service and Maintenance Manual.

Other Publications Available:

Service and Maintenance Manual 3121262

Illustrated Parts Manual 3121263

8.2 OPERATING SPECIFICATIONS AND PERFORMANCE DATA

Operating Specifications

Table 8-1. Operating Specifications

Capacity - ANSI Unrestricted Restricted	 500 lbs (227 kg) 1000 lbs (454 kg)
Capacity - CE & Australia Unrestricted Restricted	 500 lbs (230 kg) 1000 lbs (450 kg)
Maximum Travel Grade, stowed Position (Gradeability) see Figure 4-4.	40%
Maximum Travel Grade, stowed Position (Side Slope) see Figure 4-4.	5°
Maximum Drive Speed	3.0 mph (4.8 kph)
Gross Machine Weight - Approximate	48000 lbs. (21772 kg)
Ground Bearing Pressure - Maximum	113 psi (7.94 kgcm^2)

Table 8-1. Operating Specifications

Maximum Wind Speed	28 mph (12.5 m/s)
Maximum Manual Force	90 lbs. (400 N)
Maximum System Voltage	12 volts
Maximum Main Relief Hyd. Pressure	4600 psi (317 Bar)

Dimensional Data

Table 8-2. Dimensional Data

Turning Radius (Axles Retracted)	
Outside	22 ft. 6 in. (6.8 m)
Inside	14 ft. 5 in. (4.4 m)
Turning Radius (Axles Extended)	
Inside	8 ft. (2.4 m)
Outside	19 ft. 4 in. (5.9 m)
Machine Height (stowed)	9 ft. 11 in. (3.04 m)
Machine Length (stowed)	61 ft. 8-5/8 in. (18.81 m)
Platform Height	
Unrestricted Capacity	150 ft. 1 in. (45.75 m)
Restricted Capacity	130 ft. 2 in. (39.67 m)

Table 8-2. Dimensional Data

Horizontal Reach from centerline of rotation	
Unrestricted Capacity	80 ft. (24.38 m)
Restricted Capacity	64 ft. 11 in. (19.79 m)
Horizontal Reach over end	
Unrestricted Capacity	72 ft. 4 in. (24.38 m)
Restricted Capacity	57 ft. 3 in. (17.45 m)
Horizontal Reach over side	
Unrestricted Capacity	73 ft. 9 in. (22.48 m)
Restricted Capacity	58 ft. 9 in. (17.91 m)
Overall Width	
Axles Retracted	8ft. 2in. (2.49 m)
Axles Extended	12ft. 6in. (3.8 m)
Wheelbase	12ft. 6in. (3.81 m)
Tailswing	5ft. 5-7/8 in. (1.6 m)
Ground Clearance (Axle)	12 in. (30.4 cm)
Ground Clearance (Chassis)	25.5 in. (64.7 cm)

Capacities

Table 8-3. Capacities

Hydraulic Oil Tank	55 gal. (208 L)
Fuel Tank - Standard	31 gal. (117 L)
Fuel Tank - Optional	52.8 gal. (200 L)
Drive Hub Bonfiglioli Reggiana Riduttori	 2.1 quarts (2 liters) ± 10% 0.5 quarts (0.5 liters) ± 10%

Tires

Table 8-4. Tire Specifications

Size	445/50D710
Load Range	J
Ply Rating	18
Foam Fill	Polyurethane HD (55 Durometer) Foam
Diameter	46.45 in. (117.9 cm)
Width	18 in. (45.7 cm)
Rim Size	15x28
Tire & Wheel Weight	867 lbs. (393 kg)
Max Tire Load	28600 lbs. (12973 kg)
Size	445/65-24
Type	Solid or Solid Non-Marking
Diameter	45.3 in. (115.1 cm)
Width	17.3 in. (43.9 cm)
Rim Size	12.00-24
Tire & Wheel Weight - Solid	960 lbs. (435.4 kg)
Tire & Wheel Weight - Solid Non-Marking	990 lbs. (449 kg)
Max Tire Load	28600 lbs. (12973 kg)

Engine Data

Table 8-5. Deutz TD2011L4 Specifications

Type	Liquid Cooled
Number of Cylinders	4
Bore	3.7 in. (94 mm)
Stroke	4.4 in. (112 mm)
Total Displacement	190 cu. in. (3108 cm^3)
Compression Ratio	17.5:1
Firing Order	1-3-4-2
Output	75hp (56 kW)
Oil Capacity Cooling System w/Filter Total Capacity	 5 Quarts (4.5 L) 11 Quarts (10.5 L) 16 Quarts (15 L)
Average Fuel Consumption	1.2 gph (4.1 lph)
Idle Engine RPM	1200
Mid Engine RPM	1800
High Engine RPM	2475

Table 8-6. Deutz TCD2.9L4 Specifications

Type	Liquid Cooled
Number of Cylinders	4
Bore	3.6 in. (92 mm)
Stroke	4.3 in. (110 mm)
Total Displacement	178 cu. in. (2925 cm^3)
Firing Order	1-3-4-2
Output	74.2hp (55.4 kW)
Oil Capacity	2.4 Gallon (8.9 L)
Coolant Capacity (System)	3.2Gallon (12.1 L)
Average Fuel Consumption	1.2 gph (4.1 lph)
Min. Low Engine RPM	1200
Mid Engine RPM	1800
Max. High Engine RPM	2500

Major Component Weights

⚠ WARNING

DO NOT REPLACE ITEMS CRITICAL TO STABILITY WITH ITEMS OF DIFFERENT WEIGHT OR SPECIFICATION (FOR EXAMPLE: BATTERIES, FILLED TIRES, PLATFORM) DO NOT MODIFY UNIT IN ANY WAY TO AFFECT STABILITY.

Table 8-7. Critical Stability Weights

Components	LBS.	KG.
Counterweight	9500	4309
Tire & Wheel	867	393
Tire & Wheel	960	435.4
Drive Hub & Motor	275.5	123
Swing Drive	290	132
Complete Engine Assembly	1275	579
Complete Boom (including jib)	12513	5676
Platform 36 x 96	245	111
Platform 36 x 72	195	89

Hydraulic Oil

Table 8-8. Hydraulic Oil

Hydraulic System Operating Temperature Range	S.A.E. Viscosity Grade
+0° to + 180° F (-18° to +83° C)	10W
+0° to + 210° F (-18° to +99° C)	10W-20, 10W30
+50° to + 210° F (+10° to +99° C	20W-20

NOTE: *Hydraulic oils require anti-wear qualities at least API Service Classification GL-3, and sufficient chemical stability for mobile hydraulic system service.*

NOTE: *Aside from JLG recommendations, it is not advisable to mix oils of different brands or types, as they may not contain the same required additives or be of comparable viscosities.*

OIL SAMPLING

See Figure 8-1., Oil Sampling Port.

This machine is equipped with an oil sampling valve to allow for verification of hydraulic oil condition. Refer to the Service Manual for Oil Sampling procedures.

Table 8-9. Mobilfluid 424 Specs

SAE Grade	10W30
Gravity, API	29.0
Density, Lb/Gal. 60°F	7.35
Pour Point, Max	-46°F (-43°C)
Flash Point, Min.	442°F (228°C)
Viscosity	
Brookfield, cP at -18°C	2700
at 40° C	55 cSt
at 100° C	9.3 cSt
Viscosity Index	152

Table 8-10. Mobil DTE 10 Excel 32 Specs

ISO Viscosity Grade	#32
Specific Gravity	0.877
Pour Point, Max	-40°F (-40°C)
Flash Point, Min.	330°F (166°C)
Viscosity	
at 40° C	33cSt
at 100° C	6.6 cSt
at 100° F	169 SUS
at 210° F	48 SUS
cp at -20° F	6,200
Viscosity Index	140

Table 8-11. UCon Hydrolube HP-5046

Type	Synthetic Biodegradable
Specific Gravity	1.082
Pour Point, Max	-58°F (-50°C)
pH	9.1
Viscosity	
at 0° C (32° F)	340 cSt (1600SUS)
at 40° C (104° F)	46 cSt (215SUS)
at 65° C (150° F)	22 cSt (106SUS)
Viscosity Index	170

Table 8-12. Mobil EAL H 46 Specs

Type	Synthetic Biodegradable
ISO Viscosity Grade	46
Density at 15° C	.874
Pour Point	-49°F (-45°C)
Flash Point	500°F (260°C)
Operating Temp.	-20 to 200°F (-29 to 93°C)
Weight	7.64 lb/gal (0.9 kg/L)
Viscosity	
at 40° C	48.8 cSt
at 100° C	7.8 cSt
Viscosity Index	145

Table 8-13. Mobil EAL 46 Specs

Type	Synthetic Biodegradable
ISO Viscosity Grade	46
Density at 15° C	.93
Pour Point	-27°F (-33°C)
Flash Point	568°F (298°C)
Operating Temp.	-20 to 200°F (-29 to 93°C)
Weight	7.64 lb/gal (0.9 kg/L)
Viscosity	
at 40° C	43.3 cSt
at 100° C	7.7 cSt
Viscosity Index	149

Table 8-14. Exxon Univis HVI 26 Specs

Specific Gravity	32.1
Pour Point	-76°F (-60°C)
Flash Point	217°F (103°C)
Viscosity	
at 40° C	25.8 cSt
at 100° C	9.3 cSt
Viscosity Index	376
NOTE: *Mobil/Exxon recommends that this oil be checked on a yearly basis for viscosity.*	

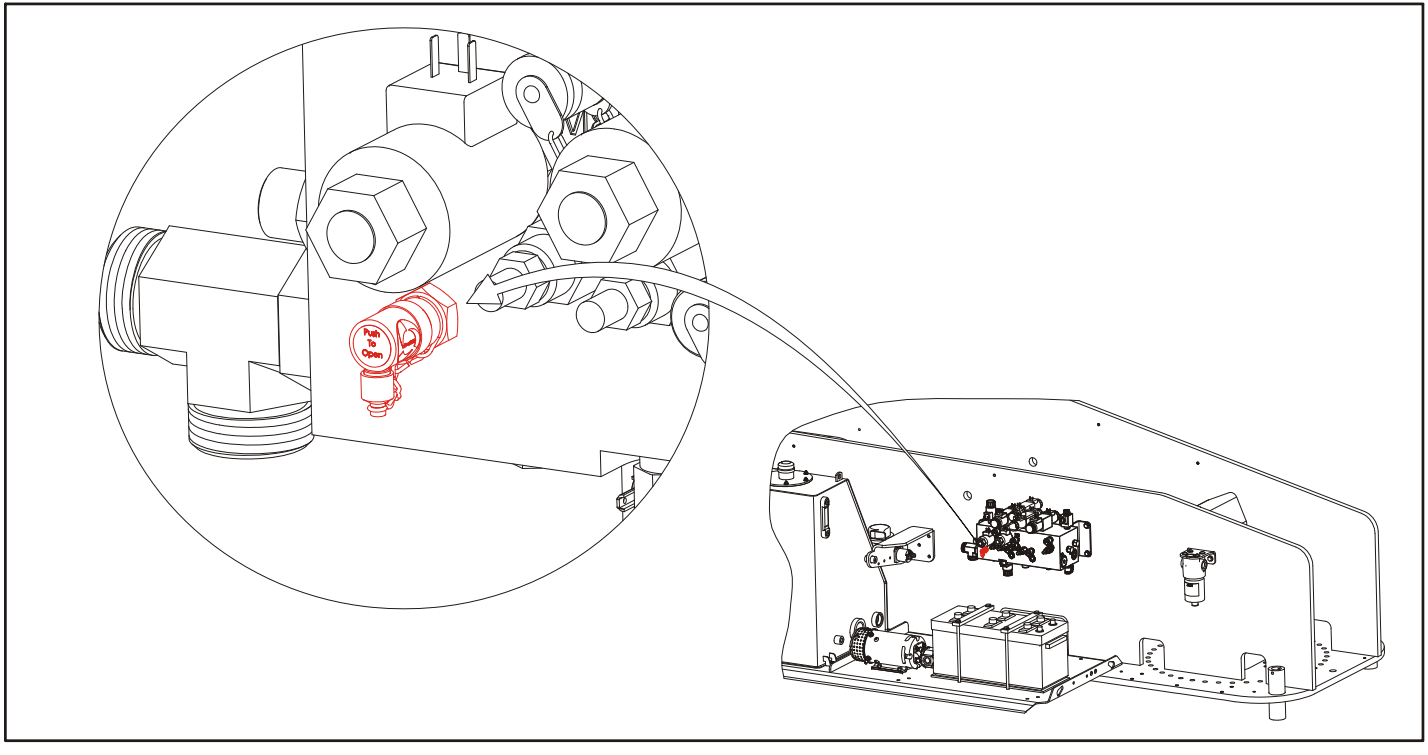

Figure 8-1. Oil Sampling Port

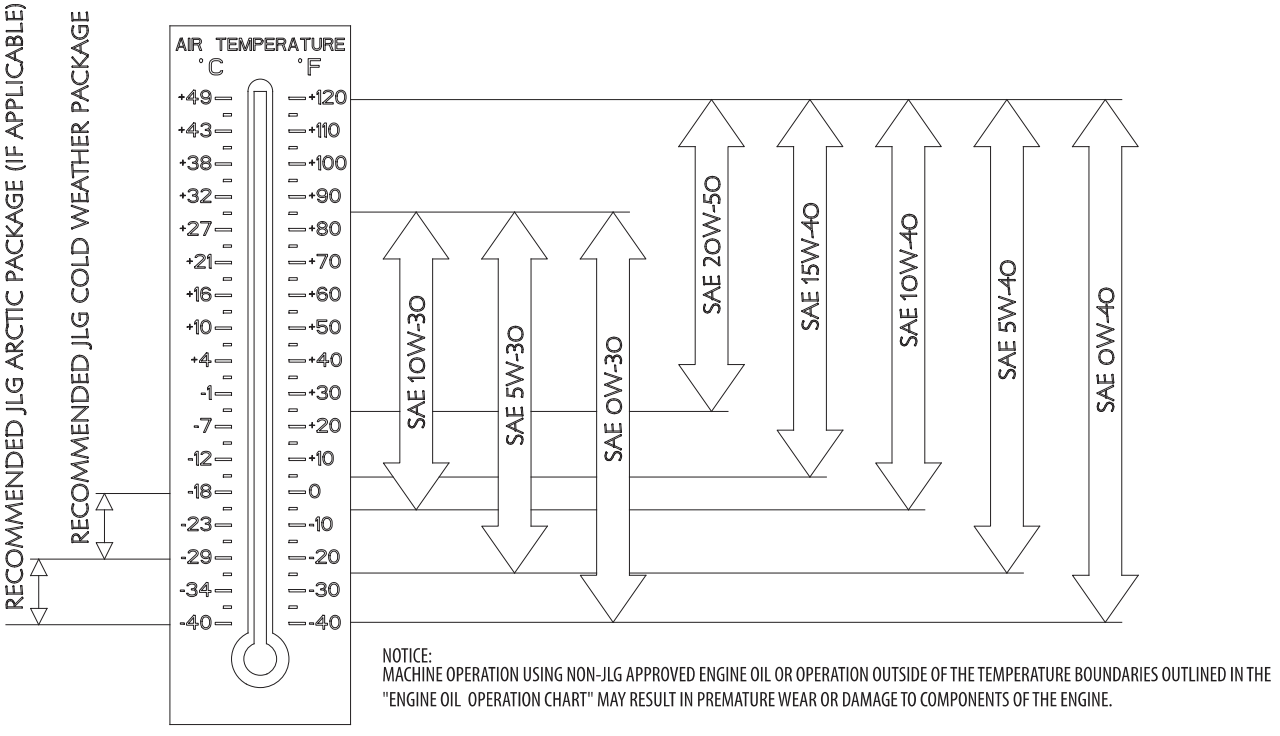

NOTICE:
MACHINE OPERATION USING NON-JLG APPROVED ENGINE OIL OR OPERATION OUTSIDE OF THE TEMPERATURE BOUNDARIES OUTLINED IN THE "ENGINE OIL OPERATION CHART" MAY RESULT IN PREMATURE WEAR OR DAMAGE TO COMPONENTS OF THE ENGINE.

Figure 8-2. Engine Operating Temperature Specifications

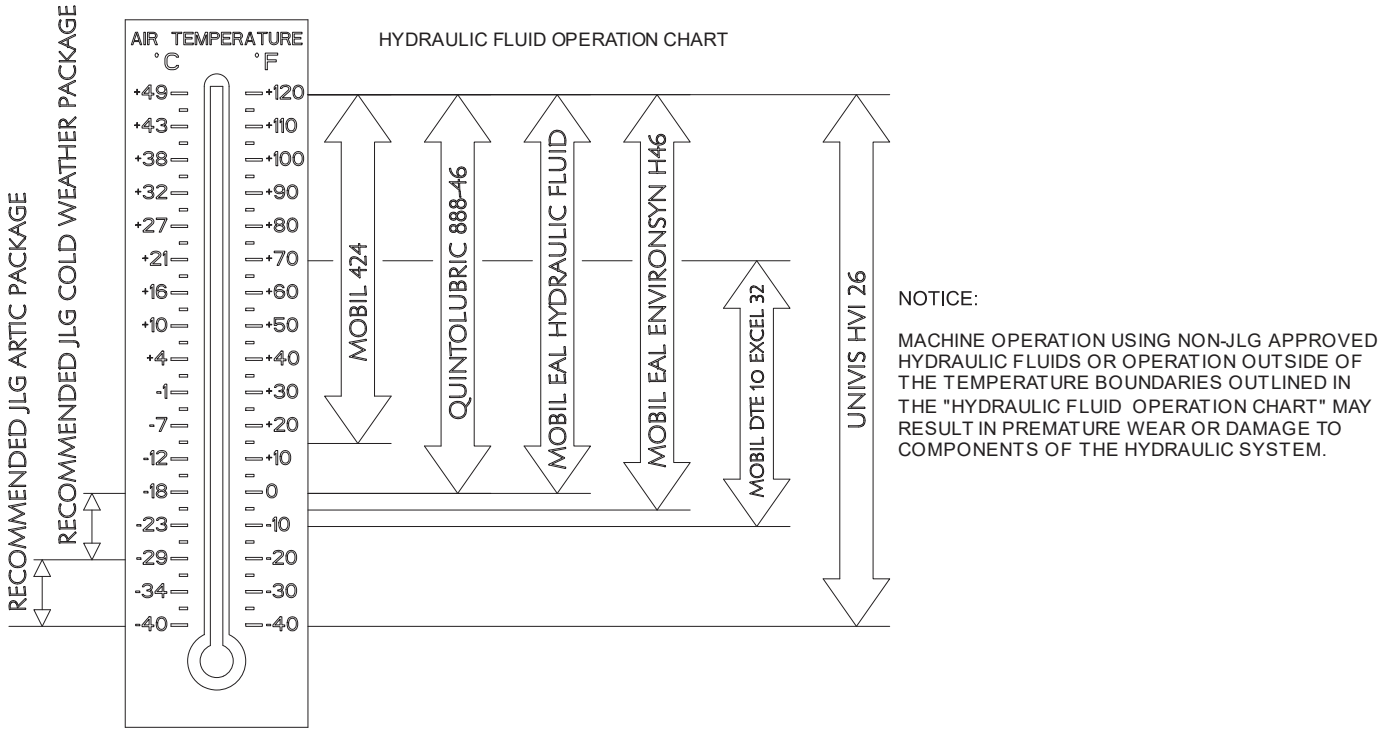

Figure 8-3. Hydraulic Oil Operation Chart

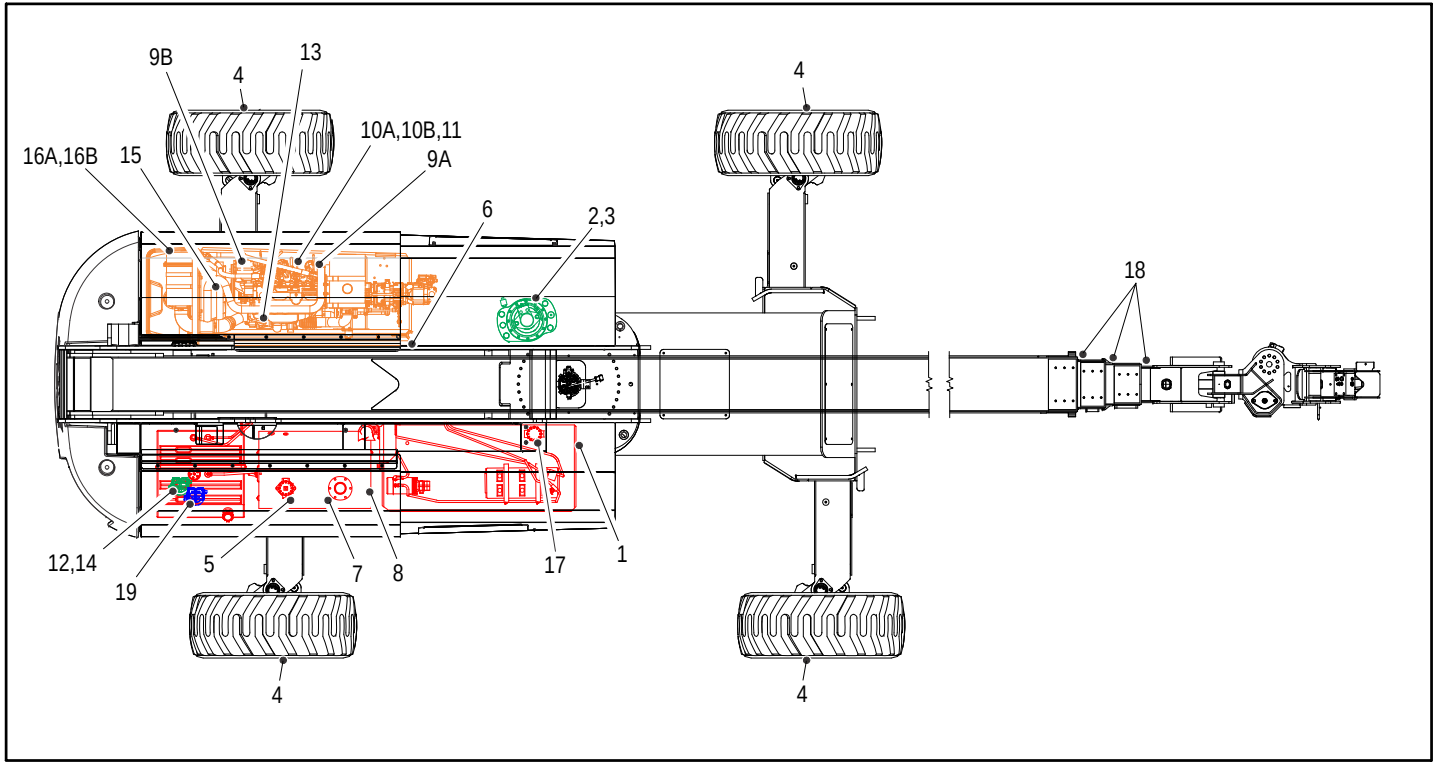

Figure 8-4. Operator Maintenance and Lubrication Diagram

8.3 OPERATOR MAINTENANCE

NOTE: *The following numbers correspond to those in Figure 8-4., Operator Maintenance and Lubrication Diagram.*

Table 8-15. Lubrication Specifications.

KEY	SPECIFICATIONS
MPG	Multipurpose Grease having a minimum dripping point of 350° F (177° C). Excellent water resistance and adhesive qualities, and being of extreme pressure type. (Timken OK 40 pounds minimum.)
EPGL	Extreme Pressure Gear Lube (oil) meeting API service classification GL-5 or MIL-Spec MIL-L-2105
HO	Hydraulic Oil. API service classification GL-3, e.g. Mobilfluid 424
EO	Engine (crankcase) Oil. Gas - API SF, SH, SG class, MIL-L-2104. Diesel - API CC/CD class, MIL-L-2104B/MIL-L-2104C
Super Lube®	Synthetic-Based Oil, Non-Flammable. Withstands temperatures within -45° to 450°F (-43° to 232° C). JLG P/N 3020042.

NOTICE

LUBRICATION INTERVALS ARE BASED ON MACHINE OPERATION UNDER NORMAL CONDITIONS. FOR MACHINES USED IN MULTI-SHIFT OPERATIONS AND/OR EXPOSED TO HOSTILE ENVIRONMENTS OR CONDITIONS, LUBRICATION FREQUENCIES MUST BE INCREASED ACCORDINGLY.

1. Swing Bearing - Remote Lube

Lube Point(s) - 2 Grease Fitting
Capacity - A/R
Lube - MPG
Interval - Every 3 months or 150 hours of operation

2. Swing Gearbox

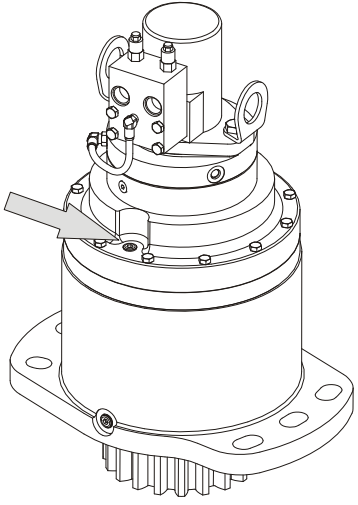

Lube Point(s) - Fill Plug
Capacity - 79 ounces (2.3 L)
Lube - GL-5
Interval - Check level every 150 hrs/Change every 1200 hours of operation. Fill to cover ring gear.

3. Swing Brake

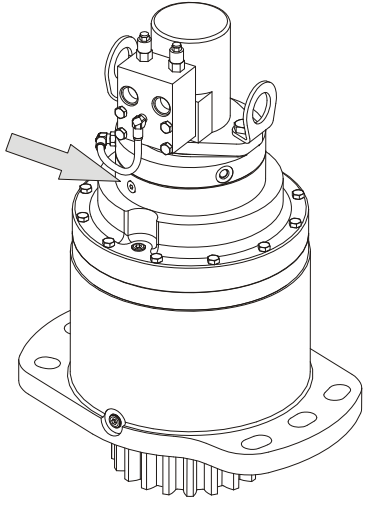

Lube Point(s) - Fill Plug
Capacity - 2.7 ounces (80 ml)
Lube - DTE24
Interval - Check level every 150 hrs/Change every 1200 hours of operation.

4. A. Wheel Drive Hub - Bonfiglioli

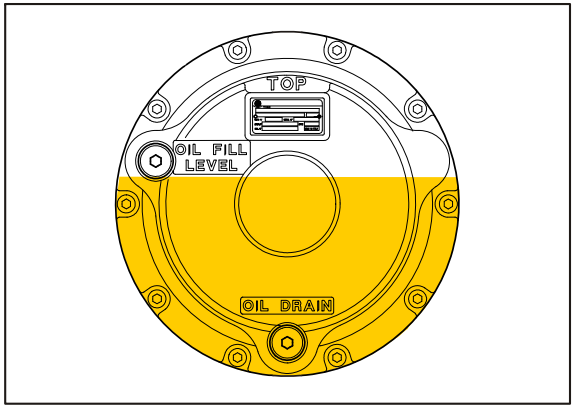

Lube Point(s) - Level/Fill Plug
Capacity - 2.1 quarts (2 liters) ± 10%
Lube - EPGL
Interval - Change after first 150 hours then every 1200 hours of operation
Comments - Place Fill port at 12 o'clock position and Check port at 8 o'clock position. Pour lubricant into fill port until it just starts to flow out of check port.

B: Wheel Drive Hub - Reggiana Riduttori

Lube Point(s) - Level/Fill Plug
Capacity - 0.5 quarts (0.5 liters) ± 10%
Lube - EPGL
Interval - Change after first 150 hours then every 1200 hours of operation
Comments - Place Fill port at 12 o'clock position and Check port at 3 o'clock position. Pour lubricant into fill port until it just starts to flow out of check port.

5. Hydraulic Return Filter

Lube Point(s) - Replaceable Element
Interval - Change after first 50 hours and every 300 hours thereafter or as indicated by condition indicator

6. Hydraulic Charge Filter

Lube Point(s) - Replaceable Element
Interval - Change after first 50 hours and every 300 hours thereafter or as indicated by condition indicator.

7. Hydraulic Oil

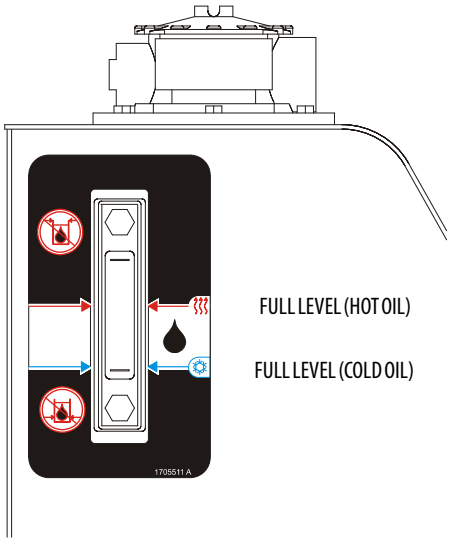

Lube Point(s) - Fill Cap
Capacity - Standard 31 gallons (117 liters)
Optional 52.8 gallons (200 liters)
Lube - HO
Interval - Check level daily. Change every 2 years or 1200 hours of operation.

8. Suction Strainers (In Tank)

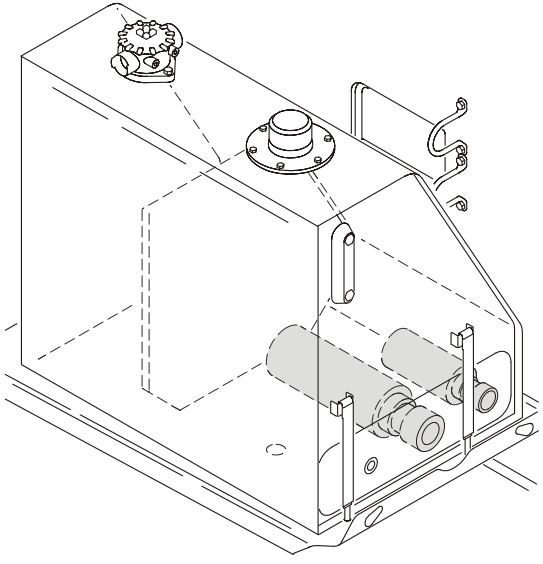

Lube Point(s) - 2
Interval - Every 2 years or 1200 hours of operation.
Remove and clean at time of hydraulic oil change.

9. A. Oil Change w/Filter - Deutz TD2011

Lube Point(s) - Fill Cap/Spin-on Element
Capacity -
5 Quarts (4.5 L) Cooling System
11 Quarts (10.5 L) w/Filter
16 Quarts (15 L) Total Capacity
Lube - EO
Interval - Check level daily; change every 500 hours or six months, whichever comes first. Adjust final oil level by mark on dipstick.

B. Oil Change w/Filter - Deutz TCD2.9

Lube Point(s) - Fill Cap/Spin-on Element
Capacity - 2.4 Gallon (8.9 L)
Lube - EO
Interval - Check level daily; change every 500 hours or six months, whichever comes first. Adjust final oil level by mark on dipstick.

10. A. Fuel Filter - Deutz TD2011

Lube Point(s) - Replaceable Element
Interval - Every year or 600 hours of operation

B. Fuel Filter - Deutz TCD2.9

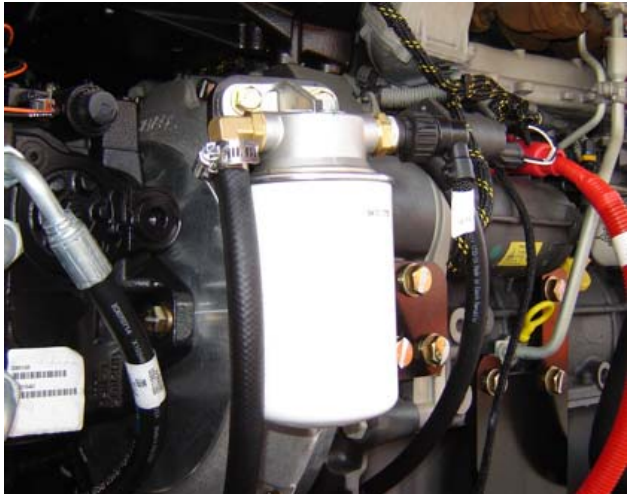

Lube Point(s) - Replaceable Element
Interval - Every year or 600 hours of operation

11. Fuel Strainer TD2011

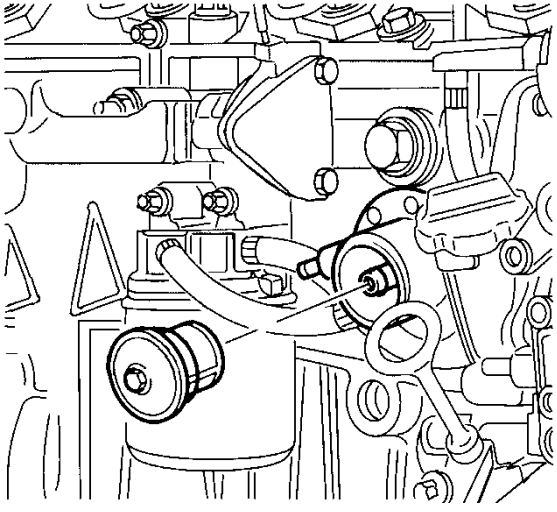

Lube Point(s) - Replaceable Element
Interval - Every year or 600 hours of operation

12. Fuel Pre-Filter TCD2.9

Lube Point(s) - Replaceable Element
Interval - Drain water daily; Change every year or 600 hours of operation

13. Oil Change w/Filter - CAT

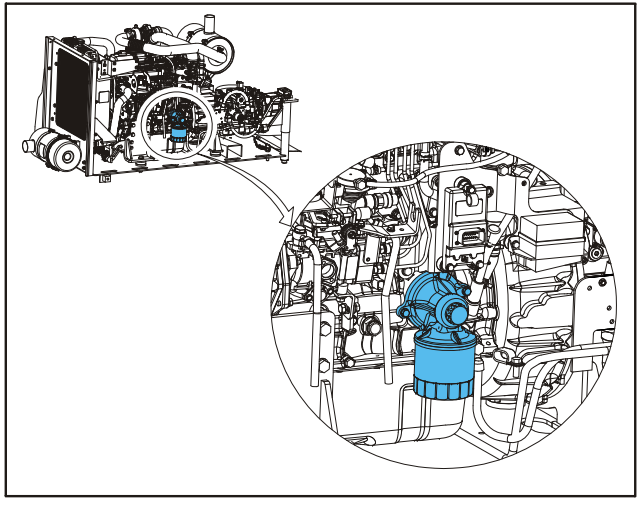

Lube Point(s) - Fill Cap/Spin-on Element
Capacity - 10.5 Quarts (10 L)
Lube - EO
Interval - Check level daily; change every 150 hours or three months, whichever comes first. Adjust final oil level by mark on dipstick.

14. Fuel Filter - CAT

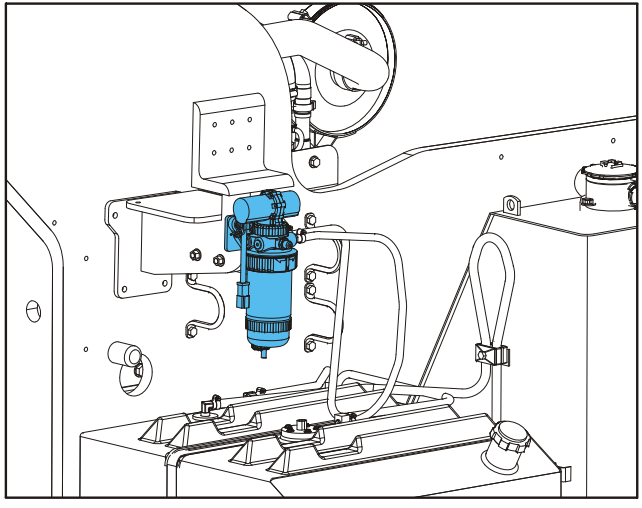

Lube Point(s) - Replaceable Element
Interval - Drain water daily; Change every year or 600 hours of operation

15. Radiator Coolant TCD2.9

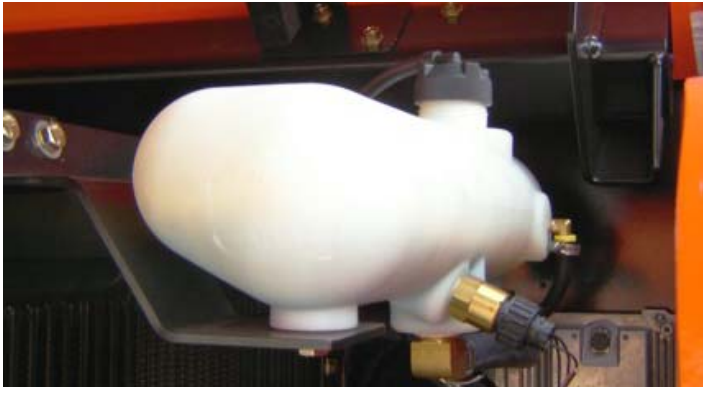

Lube Point(s) - Fill Cap
Capacity - 3.2Gallon (12.1 L)
Lube - Anti-Freeze
Interval - Check level daily; change every 1000 hours or 2 years, whichever comes first.

16. A. Air Filter - Deutz TD2011

Lube Point(s) - Replaceable Element
Interval - Every 6 months or 300 hours of operation or as indicated by the condition indicator

B. Air Filter - Deutz TCD2.9

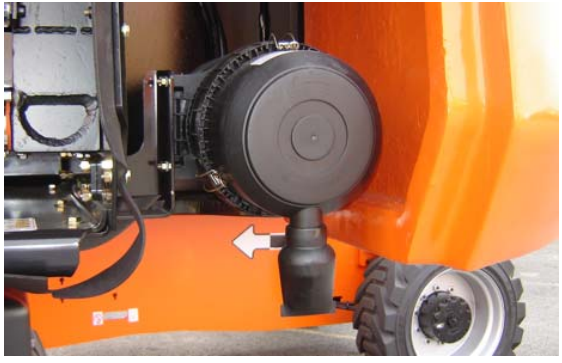

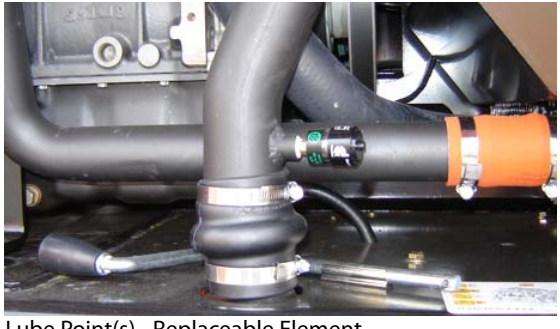

Lube Point(s) - Replaceable Element
Interval - Every 6 months or 300 hours of operation or as indicated by the condition indicator
Comments - Check Dust Valve daily

17. Platform Filter

Lube Point(s) - Replaceable Element
Interval - Change after first 50 hours and then every year or 600 hours of operation thereafter

18. Boom

Lube Point(s) - Apply to wear pad contact paths
Lube - Super Lube®
Interval - As needed. Refer to the Service Manual for detailed procedures

19. Optional Fuel Filter/Water Separator

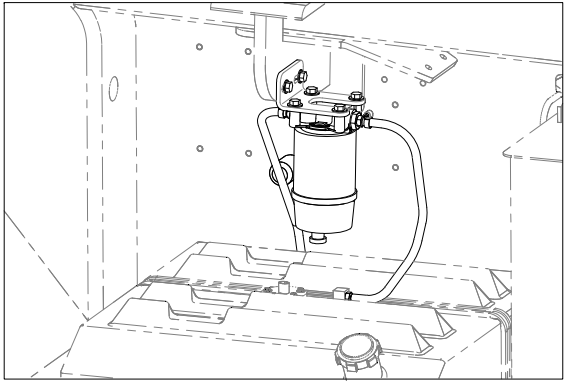

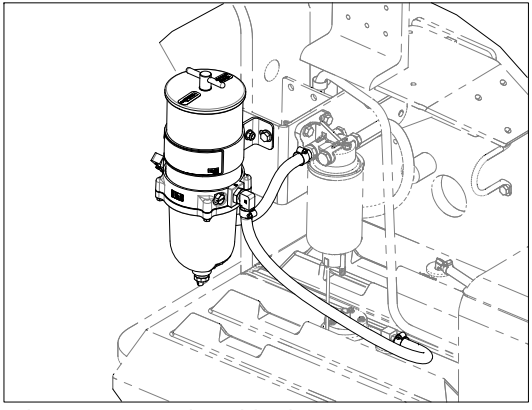

Lube Point(s) - Replaceable Element

Interval - Drain water daily; Change every year or 600 hours of operation

8.4 TIRES & WHEELS

Tire Inflation

The air pressure for pneumatic tires must be equal to the air pressure that is stenciled on the side of the JLG product or rim decal for safe and proper operational characteristics.

Tire Damage

For pneumatic tires, JLG Industries, Inc. recommends that when any cut, rip, or tear is discovered that exposes sidewall or tread area cords in the tire, measures must be taken to remove the JLG product from service immediately. Arrangements must be made for replacement of the tire or tire assembly.

For polyurethane foam filled tires, JLG Industries, Inc. recommends that when any of the following are discovered, measures must be taken to remove the JLG product from service immediately and arrangements must be made for replacement of the tire or tire assembly.

- a smooth, even cut through the cord plies which exceeds 3 inches (7.5 cm) in total length
- any tears or rips (ragged edges) in the cord plies which exceeds 1 inch (2.5 cm) in any direction
- any punctures which exceed 1 inch in diameter
- any damage to the bead area cords of the tire

If a tire is damaged but is within the above noted criteria, the tire must be inspected on a daily basis to insure the damage has not propagated beyond the allowable criteria.

Tire Replacement

JLG recommends a replacement tire be the same size, ply and brand as originally installed on the machine. Please refer to the JLG Parts Manual for the part number of the approved tires for a particular machine model. If not using a JLG approved replacement tire, we recommend that replacement tires have the following characteristics:

- Equal or greater ply/load rating and size of original
- Tire tread contact width equal or greater than original
- Wheel diameter, width, and offset dimensions equal to the original
- Approved for the application by the tire manufacturer (including inflation pressure and maximum tire load)

Unless specifically approved by JLG Industries Inc. do not replace a foam filled or ballast filled tire assembly with a pneumatic tire. When selecting and installing a replacement tire, ensure that all tires are inflated to the pressure recommended by JLG. Due to size variations between tire brands, both tires on the same axle should be the same.

Wheel Replacement

The rims installed on each product model have been designed for stability requirements which consist of track width, tire pressure, and load capacity. Size changes such as rim width, center piece location, larger or smaller diameter, etc., without written factory recommendations, may result in an unsafe condition regarding stability.

Wheel Installation

It is extremely important to apply and maintain proper wheel mounting torque.

⚠ WARNING

WHEEL NUTS MUST BE INSTALLED AND MAINTAINED AT THE PROPER TORQUE TO PREVENT LOOSE WHEELS, BROKEN STUDS, AND POSSIBLE DANGEROUS SEPARATION OF WHEEL FROM THE AXLE. BE SURE TO USE ONLY THE NUTS MATCHED TO THE CONE ANGLE OF THE WHEEL.

Tighten the lug nuts to the proper torque to prevent wheels from coming loose. Use a torque wrench to tighten the fasteners. If you do not have a torque wrench, tighten the fasteners with a lug wrench, then immediately have a service garage or dealer tighten the lug nuts to the proper torque. Over-tightening will result in breaking the studs or permanently deforming the mounting stud holes in the wheels. The proper procedure for attaching wheels is as follows:

1. Start all nuts by hand to prevent cross threading. DO NOT use a lubricant on threads or nuts.
2. Tighten nuts in the following sequence:

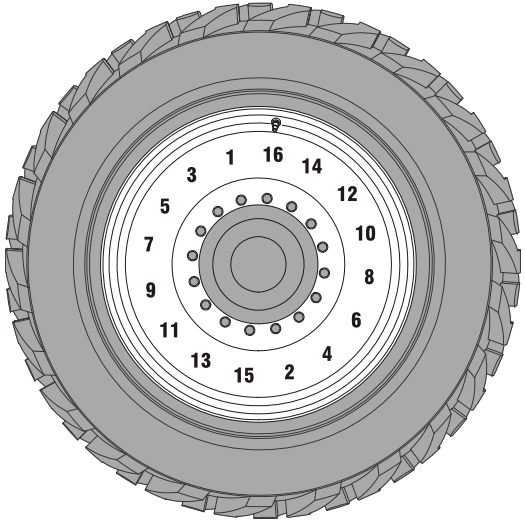

3. The tightening of the nuts should be done in stages. Following the recommended sequence, tighten nuts per wheel torque chart.

Table 8-16. Wheel Torque Chart

TORQUE SEQUENCE		
1st Stage	2nd Stage	3rd Stage
45 ft. lbs. (60 Nm)	100 ft. lbs. (140 Nm)	180 ft. lbs. (252 Nm)

4. Wheel nuts should be torqued before first road use and after each wheel removal. Check and torque every 3 months or 150 hours of operation.

8.4 SUPPLEMENTAL INFORMATION

The following information is provided in accordance with the requirements of the European Machinery Directive 2006/42/EC and is only applicable to CE machines.

For electric powered machines, the equivalent continuous A-Weighted sound pressure level at the work platform is less than 70dB(A)

For combustion engine powered machines, guaranteed Sound Power Level (LWA) per European Directive 2000/14/EC (Noise Emission in the Environment by Equipment for Use Outdoors) based on test methods in accordance with Annex III, Part B, Method 1 and 0 of the directive, is 104 dB.

The vibration total value to which the hand-arm system is subjected does not exceed 2,5 m/s^2. The highest root mean square value of weighted acceleration to which the whole body is subjected does not exceed 0,5 m/s^2.

NOTES:

SECTION 9. INSPECTION AND REPAIR LOG

Machine Serial Number _____

Table 9-1. Inspection and Repair Log

Date	Comments

Table 9-1. Inspection and Repair Log

Date	Comments

An Oshkosh Corporation Company

TRANSFER OF OWNERSHIP

To Product Owner:

If you now own but ARE NOT the original purchaser of the product covered by this manual, we would like to know who you are. For the purpose of receiving safety-related bulletins, it is very important to keep JLG Industries, Inc. updated with the current ownership of all JLG products. JLG maintains owner information for each JLG product and uses this information in cases where owner notification is necessary.

Please use this form to provide JLG with updated information with regard to the current ownership of JLG products. Please return completed form to the JLG Product Safety & Reliability Department via facsimile or mail to address as specified below.

Thank You,
Product Safety & Reliability Department
JLG Industries, Inc.
13224 Fountainhead Plaza
Hagerstown, MD 21742
USA
Telephone: +1-717-485-6591
Fax: +1-301-745-3713

NOTE: Leased or rented units should not be included on this form.

Mfg. Model: _____

Serial Number: _____

Previous Owner: _____

Address: _____

_____

Country: _____ **Telephone: (_____)** _____

Date of Transfer: _____

Current Owner: _____

Address: _____

_____

Country: _____ **Telephone: (_____)** _____

Who in your organization should we notify?

Name: _____

Title:_____

Corporate Office
JLG Industries, Inc.
1 JLG Drive
McConnellsburg, PA 17233-9533 USA
(717) 485-5161 (Corporate)
(877) 554-5438 (Customer Support)
(717) 485-6417

Visit our website for JLG Worldwide Locations
www.jlg.com